CITY OF SANTEE, CALIFORNIA
DEPARTMENT OF DEVELOPMENT SERVICES

NOTICE INVITING SEALED BIDS & CONTRACT DOCUMENTS FOR

CITY HALL TRASH ENCLOSURE MODIFICATIONS CIP 2018-52

March 2020

Project Number:	**CIP 2018-52**
Time for Completion:	**25 Working Days**
Engineer's Estimate:	**$65,000.00**
Bid Opening Date/Time:	**Thursday, April 2, 2020 at 10:00 a.m.**

(Intentionally Left Blank)

CITY OF SANTEE

SPECIFICATIONS AND CONTRACT DOCUMENTS

FOR

CITY HALL TRASH ENCLOSURE MODIFICATIONS

CIP 2018-52

Prepared by:

City of Santee
Department of Development Services
10601 Magnolia Avenue, Building 4
Santee, CA 92071-1266
(619) 258-4100

Toby M. Espinola, P.E.
Senior Civil Engineer
RCE: 62769

(Digitally Signed)

Table of Contents

NOTICE INVITING SEALED BIDS **1**

INFORMATION FOR BIDDERS **5**

SPECIAL PROVISIONS **14**

PART 1 GENERAL PROVISIONS **15**

SECTION 1 - TERMS, DEFINITIONS, ABBREVIATIONS, UNITS OF MEASURE, AND SYMBOLS 15
1-2 TERMS AND DEFINITIONS *15*
SECTION 2 - SCOPE AND CONTROL OF THE WORK 15
2-1 AWARD AND EXECUTION OF THE CONTRACT *15*
2-3 SUB-CONTRACTS *16*
2-4 CONTRACT BONDS *16*
2-5 PLANS AND SPECIFICATIONS *17*
2-7 SUBSURFACE DATA *17*
2-11 INSPECTION *18*

SECTION 3 - CHANGES IN WORK 18
3-3 EXTRA WORK *18*
3-4 CHANGED CONDITIONS *20*
3-5 DISPUTED WORK *21*
SECTION 5 - UTILITIES 25
5-1 LOCATION *25*
5-5 DELAYS *26*
5-7 COORDINATION *26*
SECTION 6 - PROSECUTION, PROGRESS, AND ACCEPTANCE OF THE WORK 27
6-1 CONSTRUCTION SCHEDULE AND COMMENCEMENT OF WORK *27*
6-2 PROSECUTION OF THE WORK *29*
6-6 DELAYS AND EXTENSIONS OF TIME *30*
6-7 TIME OF COMPLETION *31*
6-8 COMPLETION, ACCEPTANCE AND WARRANTY *31*
6-9 LIQUIDATED DAMAGES *34*
6-10 USE OF IMPROVEMENTS DURING CONSTRUCTION *34*
6-11 RIGHT TO AUDIT *34*
SECTION 7 - RESPONSIBILITIES OF THE CONTRACTOR 35
7-1 THE CONTRACTORS EQUIPMENT AND FACILITES *36*
7-2 LABOR *36*
7-3 LIABILITY INSURANCE *39*
7-4 LICENSING *43*
7-5 PERMITS *44*
7-6 THE CONTRACTOR'S REPRESENTATIVE *44*
7-7 COOPERATION AND COLLATERAL WORK *45*
7-8 WORK SITE MAINTENANCE *45*
7-9 PROTECTION AND RESTORATION OF EXISTING IMPROVEMENTS *50*
7-10 SAFETY *52*
7-17 NOTIFICATION AND COORDINATION *53*
SECTION 9 - MEASUREMENT AND PAYMENT 53
9-1 MEASUREMENT OF QUANTITIES FOR UNIT PRICE WORK *53*
9-2 LUMP SUM WORK *53*
9-3 PAYMENT *54*
9-4 WAIVER OF CLAIMS *61*

PART 2 CONSTRUCTION MATERIALS **62**

SECTION 203 - BITUMINOUS MATERIALS 62
SECTION 204 - LUMBER AND TREATMENT WITH PRESERVATIVES 62
SECTION 206 - MISCELLANEOUS METAL ITEMS 62

SECTION 210 - PAINT AND PROTECTIVE COATINGS....64

PART 3 CONSTRUCTION METHODS....66

SECTION 300 - EARTHWORK....66
SECTION 302 - ROADWAY SURFACING....67
SECTION 303 - CONCRETE AND MASONRY CONSTRUCTION....67
SECTION 305 - PILE DRIVING AND TIMBER CONSTRUCTION....68

PART 6 TEMPORARY TRAFFIC CONTROL....69

SECTION 600 - ACCESS....69
SECTION 601 - WORK AREA TRAFFIC CONTROL....69

BID SUBMITTAL PACKAGE....83

PROPOSAL....85
BID SCHEDULE....86
SIGNATURE SHEET....87
BID BOND....89
INFORMATION REQUIRED OF BIDDER....93
DESIGNATION OF SUBCONTRACTORS....95
PUBLIC WORKS CONTRACTOR REGISTRATION CERTIFICATION....97
GUARANTEE....98
NON-COLLUSION AFFIDAVIT / DECLARATION....99

SAMPLE CONTRACT DOCUMENTS....101

AGREEMENT....102
PERFORMANCE BOND....108
PAYMENT BOND....112
WORKERS' COMPENSATION INSURANCE CERTIFICATE....115

CITY OF SANTEE
STATE OF CALIFORNIA

NOTICE INVITING SEALED BIDS

The City of Santee, City, invites sealed bids for:

CITY HALL TRASH ENCLOSURE MODIFICATIONS
CIP 2018-52

Sealed bids will be received at the Office of City Clerk, City of Santee, 10601 Magnolia Avenue, Building 3, until **10:00 a.m. on Thursday, April 2, 2020** at which time they will be publicly opened and read aloud at said office. Any bidder who fails to submit its documentation by the above date and time shall have that Bid rejected and returned unopened.

Work to be done includes the furnishing of all labor, materials and equipment necessary for the removal of two existing trash enclosures, the modification of the roof of two trash enclosures and all related and necessary work as defined in the contract documents (the "Project").

Contract Documents, including Plans, Specifications and Proposal Forms, may be examined and/or downloaded on the City's website at www.cityofsanteeca.gov.

Contract Documents may also be examined at the City Clerk's Office, 10601 Magnolia Avenue, Building 3, Santee, CA 92071-1266. All bidders shall notify the City of Santee to be added to the bidder's list if plans and specifications are downloaded from the City's website in order to receive any addendums to the contract documents.

Each bid must conform and be responsive to the Contract Documents and all plans, specifications and proposal forms described above.

Each bid must be submitted in a sealed envelope bearing on the outside the name of bidder, the bidder's address, the name of the project for which the bid is submitted and the appropriate State Contractor's License designation held by the bidder. If forwarded by mail, the sealed envelope containing the bid must be enclosed in another envelope addressed to the City Clerk, City of Santee, 10601 Magnolia Avenue, Building 3, Santee, CA 92071-1266.

Bid Guarantee / Bid Bond:
Each bidder must submit a bid to the City Clerk on standard forms available in the Office of the Director of Development Services. Said bid is to be accompanied by a certified or cashier's check, cash deposit, or a bidder's bond made payable to the City of Santee, in an amount not less than 10 percent (10%) of the total bid submitted. Additional detail regarding the bid bond is set forth in the Information for Bidders, below.

Contractor Registration:
Pursuant to Labor Code sections 1725.5 and 1771.1, all contractors and subcontractors that wish to bid on, be listed in a bid proposal, or enter into a contract to perform public work must be registered with the Department of Industrial Relations. No

bid will be accepted nor any contract entered into without proof of the contractor's and subcontractors' current registration with the Department of Industrial Relations to perform public work. If awarded a Contract, the Bidder and its subcontractors, of any tier, shall maintain active registration with the Department of Industrial Relations (including payment of all required registration and annual renewal fees) for the duration of the Project.

Any listed and or unlisted subcontractor working for a public works project shall be replaced by the Contractor immediately upon notice by the City or Contractor that the subcontractor is unregistered. The Contractor shall be responsible for any costs associated with the replacement of a Subcontractor for failure to be registered with the Department of Industrial Relations as a qualified Contractor to perform work on a public works project.

Any bid submitted by a bidder who is unregistered at the time of bid opening shall be deemed a non-responsible bid and their bid shall be rejected.

License Requirements:
Pursuant to Section 7028.15 of the Business and Professions Code and Section 3300 of the Public Contract Code, all bidders must possess proper licenses for performance of this Contract at the time of submitting their bid. Contractors shall possess the following State of California Contractor's licenses, or such other licenses as may be allowed by law, at the time of bid submission in order to perform the work: **Class "A" or "B".**

Subcontractors must possess the appropriate licenses for each specialty work subcontracted. Contractors who are ineligible to perform work on a public works project pursuant to Section 1777.1 or Section 1777.7 of the Labor Code are prohibited from bidding on this Project.

Prevailing Wages:
Bidders are advised that this Contract is a public work for purposes of the California Labor Code, which requires payment of prevailing wages. This project is subject to compliance monitoring and enforcement by the State of California, Department of Industrial Relations.

The City has obtained from the Director of the Department of Industrial Relations the general prevailing rate of per diem wages and the general prevailing rate for holiday and overtime work in the locality in which this work is to be performed for each craft, classification or type of worker needed to execute the contract. These per diem rates, including holiday and overtime work, as well as employer payments for health and welfare, pension, vacation, and similar purposes are on file at the Office of the Director of Development Services, and also available from the Director of the Department of Industrial Relations. These per diem rates will be made available to any interested party upon request. Each Contractor to whom a Contract is awarded and every Subcontractor must pay the prevailing rates, post copies thereof at the job site and otherwise comply with applicable provisions of state law.

It shall be mandatory upon the bidder to whom the Contract is awarded, and upon any Subcontractor under him, to comply with all Labor Code provisions, which include, but

are not limited to the payment of not less than the said specified rates to all workers employed by them in the execution of the Contract, employment of apprentices, retention of payroll records, hours of labor and debarment of Contractors and Subcontractors.

This Project is subject to compliance monitoring and enforcement by the Department of Industrial Relations. In bidding on this project, it shall be the Bidder's sole responsibility to evaluate and include the cost of complying with all labor compliance requirements under this contract and applicable law in its bid.

Employment of Apprentices
The California Labor Code requires the contractor and any subcontractors to employ registered apprentices on public works projects pursuant to Section 1777.5.

Interest In More Than One Bid:
No bidder shall be allowed to make, submit or be interested in more than one bid. However, a person, firm, corporation or other entity that has submitted a sub-proposal to a bidder, or that has quoted prices of materials to a bidder, is not thereby disqualified from submitting a sub-proposal or quoting prices to other bidders submitting a bid to the City.

Changes to Bid Invitation:
Any material changes, additions, or deletions to the bid invitation within 72-hours of the date and time for opening of bids described herein shall result in an extension of time for the submission of such bids by no less than 72-hours.

Rejection of Bids:
The City Council reserves the right to reject any or all bids and to waive any informality or irregularity in any bid received and to be the sole judge of the merits of the respective bids received. The award, if made, will be made to the lowest responsive and responsible bidder.

Award of Contract:
The City shall determine the lowest bid as the Bidder submitting the lowest bid as defined in the Bid Schedule for the "**Base Bid"** who is deemed responsive and responsible. Award of the base bid and any alternates for the Project shall be based upon funds available.

Contract Bonds:
The Successful Bidder will be required to furnish a Performance Bond in the amount of one hundred percent (100%) of the Total Bid Price, and a Payment (Material and Labor) Bond in the amount of one hundred percent (100%) of the Total Bid Price, on the forms provided and in the manner described in the Bid Documents. The Bid Bond will be forfeited should the bidder to whom the Contract is awarded fail to enter into the Contract and provide the required Performance and Payment Bonds and Certificate(s) of Insurance within ten (10) calendar days after the date of receipt of Notice of Award of the Contract pursuant to the terms of said Bid Bond.

Monies withheld by the City to ensure performance under the contract may be released in accordance with Public Contract Code 22300 and these Contract Documents.

Pursuant to Public Contract Code Section 22300, for monies earned by the Contractor and withheld by the City of Santee to ensure the performance of the Contract, the Contractor, may, at its option, choose to substitute securities meeting the requirements of said Public Contract Code Section 22300.

No bidder may withdraw his or her bid for a period sixty (60) calendar days after the date set for the opening of bids.

The City of Santee complies with the Americans with Disabilities Act. If you require reasonable accommodations for the pre-bid conference or bid opening, please contact the Office of the City Clerk, (619) 258-4100, at least 48 hours prior to the meeting.

Toby Espinola

Toby M. Espinola, P.E.
Senior Civil Engineer
City of Santee, California

CITY OF SANTEE

CITY HALL TRASH ENCLOSURE MODIFICATIONS
CIP 2018-52

INFORMATION FOR BIDDERS

PREPARATION OF PROPOSAL FORMS

1. **Preparation:** The City invites bids, on the forms attached under "Bid Submittal Package," to be submitted until the time and at the place set for the opening of bids in the published "Notice to Contractors." Bids not presented on forms so furnished will be disregarded. All bids must be under sealed cover. The City will not accept any bids or bid modifications submitted by facsimile or electronic mail transmission.

   The Bids forms are contained herein, together with the Notice to Contractors, Agreement and Special Provisions. The Bids forms within these documents may be detached therefrom. The bid shall set forth the unit price bid clearly in legible figures, in the respective space provided in the Bid Schedule, and shall be signed by the bidder, who shall fill out all blanks in the bid forms as herein required.

   In case of discrepancy between the unit price and the total set forth for the item, the written unit price shall prevail, provided, however, if the amount set forth as a unit price is ambiguous, unintelligible or uncertain for any cause, or is omitted, or in the case where the unit price is the same as the entry in the "Total" column, then the amount set forth in the "Total" column for the item shall prevail in accordance with the following:

   A. As to the lump sum items, the amount set forth in the "Total" column shall be the unit price.
   B. As to the unit price items, the amount set forth in the "Total" column shall be divided by the estimated quantity for the item and the price thus obtained shall be the unit price.

   Any error in the addition of the amounts constituting the items of the Bid Schedule will be corrected and such corrected total(s) shall be used to determine the successful bidder. All prices or sums shall include all sales and other taxes which may be applicable.

   The bid must be executed in accordance with these instructions and the instructions contained on the forms provided. If the bidder is an individual or a partner, the signature on the bid and the Bid Bond must be the same as the name of the bidder shown on other parts of these forms. (Showing the name as "J.E. Doe" and the signature as "John E. Doe" may be considered as an irregularity.)

2. **Ethics in Bidding:** The City expects the bidders to maintain high ethical standards in engaging in the competitive bidding process. The bid amount of one bidder should not be divulged to another before the award of the subcontract or order, nor

should it be used by bidders to secure a lower bid from another bidder on that project (bid shopping). Subcontractors or suppliers should not request information for the bidder regarding any sub-bid in order to submit a lower proposal on that project (bid peddling). The City will consider any bidder found to be engaging in such practices to be a non-responsible bidder and may reject its bid on that ground.

3. **Modifications on the Submitted Bid:** Modifications, changes or additions to the bid may be considered an irregularity. Erasures, interlineations, or corrections in preparing the bids must be initialed by the person(s) signing the bid in the margin immediately opposite the correction. Alternate proposals will not be considered unless called for.

4. **The Award of the Contract:** If made by the City, will be as specified in the Notice to Contractors Inviting Bids.

5. **No Telephone Availability:** Bidders are advised that on bid date telephones will not be available at the City Administrative Offices for use by bidders or their representatives.

6. **Bid Guarantee:** Each bid shall be accompanied by cash, a certified or cashier's check, or a bidder's bond in the amount of not less than 10 percent of the maximum amount of the bid; the check or bond made payable to the order of the City of Santee. Said check or bond shall be given as a guarantee that the bidder will, within ten (10) days after being requested to do so by the City, enter into a contract and provide the required bonds and insurance contracts if awarded the work; if the bidder to whom the work has been awarded and to whom the request has been made refuses or fails to enter into said contract and provide the required bonds and insurance contracts within the specified time, the check shall be forfeited to the City or the Contractor and surety on the bond shall be liable to the City for the amount thereof in accordance with its terms. When the lowest responsible bidder executes and delivers to the City the required contract documents, the bid bond or the certified or cashier's check will be returned to the bidder.

7. **Disqualification of Bidders:** A bidder shall be considered disqualified for any of the following reasons:

   (a) Submitting more than one bid from the same partnership, firm, or corporation under the same or different name.

   (b) Evidence of collusion among bidders. Bidders participating in such collusion shall be disqualified as bidders for any future work of the City until any such participating bidder has been reinstated by the City as a qualified bidder.

   A person, firm or corporation may submit a sub proposal to more than one bidder, or may submit sub proposals in addition to submitting a proposal as bidder, without being disqualified.

8. **Relief of Bidder:** If the bidder claims a mistake was made in his bid, the bidder shall give the City written notice within five (5) days after the opening of bids of the alleged mistake, specifying in the notice in detail how the mistake occurred.

9. **Withdrawal or Revision of Bid:** A bidder may withdraw or revise (by withdrawal of one bid and submission of another) a bid, provided that the bidder's request for withdrawal is received at the Office of the City Clerk in writing before the time specified for opening bids. Revised bids must be submitted as specified herein. The request for withdrawal shall be executed by the bidder or by his duly authorized representative. Bids that are received after the time specified for opening bids shall be returned to the bidder unopened. After the scheduled closing time for receipt of bids, a bidder may not withdraw its bid until the expiration of sixty (60) calendar days, after which time a bid may be withdrawn only in writing and in advance of actual award of the Contract.

10. **Rejection of Bids:** Bids may be rejected if they show any alteration of form, additions not called for, conditional bids, incomplete bids, erasures, or irregularities of any kind.

    The City reserves the right to reject any irregular bid and the right to waive technicalities if such waiver is in its best interest and conforms to local laws and ordinances pertaining to the letting of construction contracts.

    When a bid is signed by an agent other than the officer or officers of a corporation authorized to sign contracts on its behalf, or a general partner of a partnership, a "Power of Attorney" must be on file with the City Clerk prior to opening bids or shall be submitted with the proposal.

11. **Filing of Bid Protests:** Bidders may file a "protest" of a bid with the City of Santee. In order for a bidder's protest to be considered valid, the protest must:

    A. Be filed in writing within five (5) calendar days after the bid opening date to the Office of the City Clerk;
    B. Clearly identify the specific irregularity or accusation;
    C. Clearly identify the specific City of Santee staff determination or recommendation being protested;
    D. Specify, in detail, the grounds of the protest and the facts supporting the protest; and
    E. Include all relevant, supporting documentation with the protest at time of filing.

    If the protest does not comply with each of these requirements, it will be rejected as invalid.

    If the protest is valid, the City of Santee, shall review the basis of the protest and all relevant information. The City of Santee will provide a written decision to the protestor. The protestor may then appeal the decision to the City Council.

12. **Bid Deposit Return:** The City will return the security accompanying the bids of all unsuccessful bidders no later than sixty (60) calendar days after award of the Contract.

13. **Interpretation of Plans and Documents:** If any person contemplating submitting a bid for the proposed Contract is in doubt as to the true meaning of any part of the drawings, specifications, or other Contract Documents, or finds discrepancies in, or omissions from the drawings and specifications, that person may submit to the City a written request for an interpretation or correction thereof. Such submittal shall be submitted in writing no later than 5:00 p.m. seven (7) calendar days prior to the bid opening to the City Representative listed below:

    Toby M. Espinola, P.E.
    Senior Civil Engineer
    City of Santee
    tobyespinola@cityofsanteeca.gov

    It shall be the bidder's responsibility to ensure receipt of all emails. Any and all such interpretations and any supplemental instructions will be in the form of written addenda to the Specifications which, if issued, will be emailed to all registered bidders and posted on the City's website at www.cityofsanteeca.gov. All addenda so issued shall become part of the Contract Documents. It shall be the bidder's responsibility to ensure receipt of all emails and/or faxes. Bidders shall notify the City's representative in writing in order to be listed as a registered bidder and posted on the plan holders list which is available for review on the City's website. The person submitting the request will be responsible for its prompt delivery. In the event that an addendum or bulletin, setting forth material changes, additions or deletions is issued when there are seventy-two (72) hours or less to the bid deadline, the City will extend the bidding deadline by at least seventy-two (72) hours. No person is authorized to make any oral interpretation of any provision in the Contract Documents to any bidder, and no bidder is authorized to rely on any such unauthorized oral interpretation.

14. **Request For Substitutions:**

    a. For purposes of this provision the term "substitution" shall mean the substitution of any material, process or article that is substantially equal or better in every respect to that so indicated or specified in the specifications.

    b. Pursuant to Public Contract Code Section 3400 (c) the City may make a finding that is described in the invitation for bids that designates certain products, things, or services by specific brand or trade name for the statutorily enumerated purposes. As required by section 3400 (c) the City has made such findings as further described in the Special Conditions. These findings, as well as the products and their specific brand or trade names that must be used for the Project may be found in Section 200 of the Special Conditions.

    c. Unless specifically designated in Section 200 of the Special Conditions, whenever in specifications any material, process, or article is indicated or specified by grade, patent, or proprietary name or by name of manufacturer, such specifications shall be deemed to be used for the purpose of facilitating the description of the material, process or article desired and shall be deemed to be followed by words "or equal." Bidders may, unless otherwise stated,

offer for substitution any material, process or article which shall be substantially equal or better in every respect to that so indicated or specified. However, the City has adopted certain uniform standards for certain materials, processes and articles. If any material, process or article offered for substitution by bidders is not, in the opinion of the City, substantially equal or better in every respect to that specified, bidders shall furnish the material, process or article specified. The burden of proof as to the equality of any material, process or article shall rest with the bidders.

d. Bidders shall submit requests together with substantiating data for substitution of any "or equal" material, process or article no later than **5:00 p.m. seven (7) calendar days prior to the bid opening**. Provisions authorizing submission of "or equal" substitution justification data shall not in any way authorize an extension of time for performance of this Contract. Furthermore, if a proposed "or equal" substitution request is rejected, a bidder shall be responsible for including the specified material, process or article in its bid. The City shall not be responsible for any costs of bidders associated with "or equal" substitution requests. The City has the complete and sole discretion to determine if a material, process or article is an "or equal" material, process or article that may be substituted.

e. For purposes of subdivision (d) above, data required to substantiate requests for substitutions of an "or equal" material, process or article data shall include a signed affidavit from the bidder stating that the substituted "or equal" material, process or article is equivalent to that specified in the specification in every way except as listed on the affidavit. Substantiating data shall also include any and all illustrations, specifications, and other relevant data including catalogue information which describes the requested substituted "or equal" material, process or article and substantiates that it is an “or equal” to the material process or article specified. In addition, the submittal documentation must also include a statement of the cost implications of the substitution being requested stating whether and why the substitution of the "or equal" material, process or article will reduce or increase the Contract Price. The substantiating data must also include information regarding the durability and lifecycle cost of the requested substituted "or equal" material, process or article. Failure to submit all the needed substantiating data, including the signed affidavit, to the City Representative in a timely fashion so that the substitution can be adequately reviewed may result in the rejection of the proposed substitution. The City Representative is not obligated to review multiple substitution submittals for the same product or item due to the bidder’s failure to submit a complete package initially.

f. Time limitations in this Article must be complied with strictly and in no case will an extension of time for completion be granted because of bidder’s failure to request the substitution of an alternative item at the times and manner set forth herein in subdivision (d). Further, the bidder shall bear the costs of all Engineering work associated with the review of submittals for substitution of equals.

g. In event the Contractor furnishes material, process, or article more expensive than that specified, the difference in cost of such material, process, or article so furnished shall be borne by Contractor.

15. **Evidence of Responsibility:** If bidders were not required to pre-qualify prior to being allowed to bid on the Project, the following information will be required to accompany bids submitted to the City:

    Each bid shall be supported by a statement of the bidder's experience as of recent date on the form entitled "INFORMATION REQUIRED OF BIDDER", bound herein. City may also consider the qualifications and experience of subcontractors and other persons and organizations (including those who are to furnish the principal items of material and equipment) proposed for those portions of the work. Operating costs, maintenance considerations, performance data and guarantees of materials and equipment may also be considered by the City. In this regard, the City may conduct such investigations as the City deems necessary to assist in the evaluation of any bid and to establish the responsibility, qualifications and financial ability of the bidder, proposed subcontractors, and other persons and organizations to do the work in accordance with the Contract Documents to the City's satisfaction within the prescribed time; the City reserves the right to reject the bid of any bidder who does not pass any such evaluation to the satisfaction of the City.

16. **Signing of Bids:** All bids submitted shall be signed by the Bidder or its authorized representative. Bidders may be asked to provide evidence in the form of an authenticated resolution of its Board of Directors or a Power of Attorney evidencing the capacity of the person signing the Bid to bind the Bidder to each Bid and to any Contract arising therefrom. If a Bidder is a joint venture or partnership, it may be asked to submit an authenticated Power of Attorney executed by each joint venturer or partner appointing and designating one of the joint venturers or partners as a management sponsor to execute the Bid on behalf of Bidder. Only that joint venturer or partner shall execute the Bid. The Power of Attorney shall also: (1) authorize that particular joint venturer or partner to act for and bind Bidder in all matters relating to the Bid; and (2) provide that each venturer or partner shall be jointly and severally liable for any and all of the duties and obligations of Bidder assumed under the Bid and under any Contract arising therefrom. The Bid shall be executed by the designated joint venturer or partner on behalf of the joint venture or partnership in its legal name.

17. **Contractor's License:** To perform the work required for this Project, bidders must possess the appropriate contractor's license for the portion of the work bid upon, and bidders must maintain the license throughout the duration of the Contract. If, at the time the bids are opened, bidder is not licensed to perform the Project in accordance with division 3, chapter 9 of the Business and Professions Code of the State of California and the Notice to Contractors Calling for Bids, the bid will not be considered.

18. **Notarization of Documents:** Bidders are hereby informed that failure to notarize all bid forms contained herein, for which notarization is required, may result in rejection of the bidder's bid on the basis that bidder's bid is not responsive to these Contract Documents.

19. **Contract and Bonds:** Contractor, will be required to execute, and the form of the Performance Bond equal to one hundred percent (100%) of the successful bid, and Payment Bond equal to one hundred percent (100%) of the successful bid which the bidder will be required to furnish at the time of execution of the Contract, are included in the Contract Documents and should be carefully examined by the bidder. The required number of executed copies of the Contract, the Performance Bond, and the Payment Bond for Public Works is as specified in the Special Provisions. The Performance and Payment Bonds must be executed by an admitted Surety approved to conduct business in the State of California, pursuant to California Code of Civil Procedure Section 995.120. In addition, to the extent required by law, the Payment and Performance Bonds must be accompanied by a certified copy of the certificate of authority of the insurer issued by the Insurance Commissioner of the State of California, a certificate from the Clerk of the County of San Diego that the certificate of authority of the insurer has not been surrendered, revoked, cancelled, annulled, or suspended, or if it has that it has been renewed, and four copies of the insurer's most recent annual statement and quarterly statement filed with the Department of Insurance of the State of California.

20. **Substitution of Security:** The Contract Documents call for monthly progress payments based upon the percentage of the work completed. The City will retain in accordance to Section 9-3.2. At the request and expense of the successful bidder, the City will substitute securities for the amount so retained in accordance with Public Contract Code section 22300 and the Contract Documents.

21. **Non-Collusion Affidavit:** Bidders on all public works contracts are required to submit an affidavit of Non-Collusion with their bid. This form is included with the bid package and must be signed under the penalty of perjury and dated.

22. **Insurance:** Prior to commencement of the work the successful bidder shall purchase and maintain insurance as set forth in the Standard Specifications for Public Works Construction, and in the amounts specified in Section 7-3 of the Special Provisions to these Contract Documents, and in a form acceptable to the City. The successful bidder shall be required to file with the City certificates of such insurance, and shall name, by way of endorsement on any policy of insurance, the City and City Representative(s) as additionally insured. Failure to furnish such evidence of insurance may be considered default by the successful bidder.

23. **Workers' Compensation:** In accordance with the provisions of Section 3700 of the Labor Code, Contractor shall secure the payment of compensation to his employees. Contractor shall sign and file with the City the following declaration prior to performing the work under this Contract:

> I am aware of the provisions of Section 3700 of the Labor Code which require every employer to be insured against liability for workers' compensation or to undertake self-insurance in accordance with the provisions of that code, and I will comply with such provisions before commencing the performance of the work of this Contract.

The form of such declaration, Contractors Certificate Regarding Workers Compensation, is included as part of the Contract Documents.

24. **Prevailing Wages:** Bidders are advised that this Contract is a public work for purposes of the California Labor Code, which requires payment of prevailing wages. City has obtained from the Director of the Department of Industrial Relations the general prevailing rate of per diem wages and the general prevailing rate for holiday and overtime work. These rates will be on file at the Office of the Director of Development Services and they will be made available to any interested party upon request. Each contractor to whom a Contract is awarded and every Subcontractor must pay the prevailing rates, post copies thereof at the job site and otherwise comply with applicable provisions of state law.

    It shall be mandatory upon the bidder to whom the Contract is awarded, and upon any Subcontractor under him, to comply with all Labor Code provisions, which include, but are not limited to the payment of not less than the said specified rates to all workers employed by them in the execution of the Contract, employment of apprentices, retention of payroll records, hours of labor and debarment of Contractors and Subcontractors.

25. **Designation of Subcontractor(s):** Each bidder shall set forth on the form provided herein, and submit with its sealed bid at the time bids are due the name and address of the place of business of each subcontractor who will perform work, labor, furnish materials, or render service to the bidder on said Contract in excess of one-half (1/2) of one percent (1%) of the total bid or, in the case of bids or offers for the construction of streets or highways, including bridges, in excess of one-half of 1 percent of the prime Contractor's total bid or ten thousand dollars ($10,000), whichever is greater.

26. **Public Works Contractor Registration Certification:** Pursuant to Labor Code sections 1725.5 and 1771.1, all contractors and subcontractors that wish to bid on, be listed in a bid proposal, or enter into a contract to perform public work must be registered with the Department of Industrial Relations. No bid will be accepted nor any contract entered into without proof of the contractor's and subcontractors' current registration with the Department of Industrial Relations to perform public work. If awarded a Contract, the Bidder and its subcontractors, of any tier, shall maintain active registration with the Department of Industrial Relations for the duration of the Project. To this end, Bidder shall sign and submit with its Bid the Public Works Contractor Registration Certification on the form provided, attesting to the facts contained therein. Failure to submit this form may render the Bid non-responsive. In addition, each Bidder shall provide the registration number for each listed subcontractor in the space provided in the Designation of Subcontractors Form.

27. **Debarment of Contractors and Subcontractors:** In accordance with the provisions of the California Labor Code, contractors or subcontractors may not perform work on a public works project with a subcontractor who is ineligible to perform work on a public project pursuant to Section 1777.1 or Section 1777.7 of the California Labor Code. Any contract on a public works project entered into

between a contractor and a debarred subcontractor is void as a matter of law. A debarred subcontractor may not receive any public money for performing work as a subcontractor on a public works contract. Any public money that is paid, or may have been paid to a debarred subcontractor by a contract on the Project shall be returned to the City. The successful bidder, as Contractor, shall be responsible for the payment of wages to workers of a debarred subcontractor who has been allowed to work on the Project.

28. Anti-Discrimination: It is the policy of the City that in connection with all work performed under contracts, there be no discrimination against any prospective or active employees engaged in the work because of race, color, ancestry, national origin, religious creed, sex, age or marital status. The successful bidder agrees to comply with applicable Federal and California laws including, but not limited to, the California Fair Employment Practice Act, beginning with Government Code 12900, and Labor Code 1735. In addition, the successful bidder agrees to require like compliance by any Subcontractors employed on the work by him or her.

29. Additional Requirements: The bidder's attention is directed to the Special Provisions bound herein for additional requirements of the Proposal and Contract Documents.

SPECIAL PROVISIONS

PREFACE STANDARD SPECIFICATIONS AND STANDARD DRAWINGS

The below Standard Specifications, Standard Drawings, Modifications, are hereby made part of the Contract Documents:

STANDARD SPECIFICATIONS:

The Standard Specifications for Public Works Construction "GREENBOOK", written and promulgated by a mutual benefit corporation comprised of nine members – five representing the American Public Works Association, four from the Associated General Contractors of California, the Engineering Contractors Association, the Southern California Contractors Association and BNi Publications, Inc. shall be the Standard Specifications of the City of Santee. All work shall conform to the 2015 Edition, including supplements, of these Standard Specifications, and the following Modifications.

STANDARD DRAWINGS:

The San Diego Area Regional Standard Drawings, Latest Edition including any modifications made by the City of Santee and included herein.

REFERENCE STANDARDS:

The California Manual on Uniform Traffic Control Devices, Latest Edition shall hereinafter be collectively referred to as "CA MUTCD".

For the convenience of the Contractor, the section and subsection numbering system used in these Modifications correspond directly to that used in the "GREENBOOK" 2015 Edition.

PART 1 GENERAL PROVISIONS

Is amended as follows:

SECTION 1 - TERMS, DEFINITIONS, ABBREVIATIONS, UNITS OF MEASURE, AND SYMBOLS

1-2 TERMS AND DEFINITIONS

Whenever in the Standard Specifications or the Special Provisions the following terms are used, they shall be understood to mean and refer to the following:

Agency:	City of Santee
Board:	City Council of the City of Santee
City:	City of Santee
Engineer:	City Engineer: *Acting either directly or through properly authorized agents, such agents, acting within the scope of the particular responsibilities entrusted to them.*
Inspector:	That person or persons designated by the Engineer.

Other terms appearing in the Standard Specifications shall have the Intent and meaning specified therein.

SECTION 2 - SCOPE AND CONTROL OF THE WORK

Is amended as follows:

2-1 AWARD AND EXECUTION OF THE CONTRACT

Add the following subsections:

2-1.1 Examination of Plans, Specifications, and Project Site

The bidders shall satisfy themselves as to the character, quality, and quantities of work to be performed, materials to be furnished, and as to the requirements of the proposed Contract. The submission of a Proposal shall be prima facie evidence that the Bidder has made such examination and is satisfied as to the conditions to be encountered in performing the Work and as to the requirements of the proposed contract Plans and Specifications.

2-1.2 Award of Contract

The City shall determine the lowest bid as the Contractor submitting the lowest bid as defined in the Notice Inviting Bids.

2-1.3 Execution of Contract

The Contract shall be signed by the successful bidder in duplicate and returned, together with the contract bonds and insurance certificates within ten (10) days of receipt of these documents from the City. No contract shall be binding upon the City until the same has been completely executed by the Contractor and approved by the City Attorney, and executed by the City Manager of the City of Santee.

Failure to execute a contract and file acceptable bonds and insurance contracts as provided herein within the time limit above may be just cause for the annulment of the award and the forfeiture of the proposal guaranty.

2-1.4 Request for Information (RFI)

If the Contractor determines the work to be done is not sufficiently detailed or explained in the Contract Documents, they shall submit in writing a request to the Engineer for further explanation. RFI's shall be submitted to the City on the RFI template form provided to the Contractor by the City.

The Contractor shall provide all RFI's to the Engineer 10-working days in advance of scheduled operations to provide adequate time for the Engineer to review and respond the Contractor. The City shall not be responsible for any delays to the critical path schedule, or resulting costs due to the Contractors failure to provide RFI's to the Engineer with the required advance notice. No additional contract time will be granted to the Contractor for delays incurred as a result of failing to provide RFI's to the Engineer with the required advanced notice.

2-3 SUB-CONTRACTS

2-3.2 Self Performance

Delete the first sentence and replace with the following:

The Contractor shall perform with its own organization, Contract work amounting to at least **fifty percent (50%)** of the Total Bid.

Add the following paragraph:

For the purpose of evaluating the percentage of work performed by Subcontractors, the cost of all equipment, supplies and materials used or installed on the project by Subcontractors shall be considered as part of the work of Subcontractors. This will apply even if the Contractor supplies and pays for some or all equipment, supplies or materials used by Subcontractor.

2-4 CONTRACT BONDS

Revise the third paragraph to read:

As part of the execution of this contract, the Contractor shall furnish to the City a bond of a surety company acceptable to the City, in a sum of not less than one hundred percent (100%) of the total contract amount, as the sum set forth in the agreement for payment in full of all persons, companies, or corporations who perform labor upon or furnish material to be used in the work under this contract. Said bond shall be in the form of the Material and Labor Bond contained within these Specifications. The bond shall be maintained by the Contractor in full force and effect until the work is accepted by the City and until all claims for materials and labor are paid.

Revise the fourth paragraph to read:

As a part of the execution of the contract, the Contractor shall furnish to the City a bond payable to the City in the form of a Faithful Performance Bond contained within these Special Provisions. The performance bond shall be secured by a surety company acceptable to the City conditioned upon the faithful performance of all covenants and stipulations under this contract. The amount of the bond shall not be less than one hundred percent (100%) of the total contract amount, as this sum is set forth in the agreement. This Faithful Performance bond shall remain in full force and effect for a period of one year after acceptance of the work by the City Council, such that defects, which appear within said period will be repaired, replaced, or corrected by the Contractor, at his own cost and expense, to the satisfaction of the Engineer within thirty (30) days after written notice thereof by the City.

2.4.1 Payment

Add the following subsection:

Payment for all costs associated with Contract Bonds shall be included in the lump sum unit price bid for “Mobilization”.

2-5 PLANS AND SPECIFICATIONS

2-5.3 Submittals

2-5.3.1 General

Add the following:

The Contactor shall prepare and provide a submittal for all materials used in the project unless otherwise approved by the Engineer. Submittals shall be sent via email to the Engineer for review.

Delete the final sentence of this section.

2-5.3.7 Payment

Add the following subsection:

Payment for all costs associated with the preparation of submittals including working drawings, shop drawings, supporting information, installation instructions, preparation of manufacturer’s operation, maintenance and Warranties shall be included in the lump sum unit price bid for “Mobilization”.

2-7 SUBSURFACE DATA

Add the following:

A preliminary review of the site soils has been made from the City of Santee’s Geotechnical / Seismic Hazard Study, prepared by Geocon Inc. dated October 31, 2002. For further information related to the site soils conditions, this document is available for review at the City of Santee, Department of Development Services, Building 4, Santee, CA 92071.

Site soils conditions are listed below:

Soils Classification:	A
Soil Type:	Granitic Rock

2-11 INSPECTION

Add the following paragraph:

The City may utilize field inspectors to assist the Engineer during construction in observing the Contractors performance. Compaction testing and material testing shall be performed in accordance to Section 4.1 and not by the City Inspector unless otherwise approved by the Engineer. The contractor shall notify the City field inspector when material and compaction testing will be performed so they may be present during these tests.

The Contractor shall provide access in accordance with Cal/OSHA Standards where necessary. The City has the right, for a reasonable time to stop, or suspend the work to inspect, test or approve a portion of the work with no additional time or compensation provided as a result of the work stoppage or suspension.

Inspection of the Work shall not relieve the Contractor of any of the obligations to fulfill the Contract. Defective work shall be made good and unsuitable materials be rejected, notwithstanding that such defective work and materials have been previously overlooked by the Engineer or included in the quantities for progress payments.

Items of work placed without the benefit of inspection may be required to be removed and replaced at the sole discretion of the Engineer and without additional compensation made therefor.

.

SECTION 3 - CHANGES IN WORK

Is amended as follows:

3-3 EXTRA WORK

3-3.2 Payment

3-3.2.2 Basis for Establishing Costs

3-3.2.2.1 Labor

Delete last sentence and substitute following:

The total cost of labor for the workers used in the actual and direct performance of the work, whether the employer is the Contractor, Subcontractor, or other forces, will be the sum of the following:

1. Actual Wages: The actual wages paid shall include any employer payments to or on behalf of the workers for health and welfare, pension, vacation, and similar purposes.

2. Labor Surcharge: To the actual wages, as defined in Section 3-3.2.2.1 (1), will be added a labor surcharge set for the in the Department of Transportation publication entitled “Labor Surcharge and Equipment Rental Rates”, which is in effect on the date upon which the work is accomplished and which is a part of the contract. The Labor Surcharge shall constitute full compensation for all payments imposed by State and Federal laws and for all other payments made to, or on behalf of, the workers, other than the Actual Wages as defined in Section 3-3.2.2.1 (1).

Non-direct labor costs, including superintendence, shall be considered part of the markup of Section 3-3.2.3.

3-3.2.2.3 Tool and Equipment Rental

Delete this section and replace with the following:

The Contractor shall be paid for the use of equipment at the rental rates listed for such equipment in the State of California "Labor Surcharge and Equipment Rental Rates," which is in effect on the date upon which the work is accomplished regardless of ownership and any rental or other agreement. A rental rate adjustment will only be permitted if the Contractor can substantiate that the rental rate prevailing locally exceeds the published rate by more than 15%.

The rental rates paid as above mentioned shall include the cost of fuel, oil, lubrication, supplies, small tools, necessary attachments, repairs and maintenance of any kind, depreciation, storage, insurance and all incidentals.

All equipment shall, in the opinion of the Engineer, be in good working condition and suitable for the purpose for which the equipment is to be used. The Engineer shall approve the necessity for the use of particular equipment for the Extra Work.

Individual pieces of equipment or tools not listed in the “Labor Surcharge and Equipment Rental Rates” publication and having a replacement value of $500 or less, whether or not consumed by use, shall be considered to be small tools and not payment will be made therefor.

Rental time will not be allowed while equipment is inoperative due to breakdowns. The rental time to be paid for equipment on the work shall be the time that the equipment is in operation on the Extra Work being performed, and in addition, shall include the time required to move the equipment to the location of the Extra Work and return the equipment to its original location or another location requiring no more time than that required to return the equipment to its original location, except that moving time will not be paid for equipment that is currently on site where the Extra Work is being performed. Loading and transport costs will only be allowed in lieu of moving time when the equipment is moved by means other than its own power except that no payment will be made if the equipment is used at the site of the extra work on other than the extra work.

3-3.2.3 Markup

Delete this subsection and substitute following:

The following percentages shall be added to the Contractor's cost and shall constitute full compensation for all delay costs, overhead costs, profit, and other expenses relevant to the extra work.

Labor	20%
Materials	15%
Tools and Equipment Rental	15%
Other Items and Expenditures	15%
Work by Subcontractor	5%
Bonding	(see "Bonding" below)

Work by Subcontractor:
When all or any part of the extra work is performed by a Subcontractor, the markup established in Section 3-3.2.3 shall be applied to the Subcontractor's actual cost of such work. A markup of five percent (5%) on work added of the subcontracted portion of the extra work may be added by the Contractor. The additional markup shall reimburse the Contractor for additional administrative costs, and no other additional payment will be made by reason of performance of the extra work by a Subcontractor.

Bonding:
To the sum of the costs and markups provided for in this section, a reasonable amount shall be added for bonding at the discretion of the Engineer. The Contractor shall provide written documentation to the Engineer demonstrating the current bonding rate for the Contract and in no circumstance shall the amount of compensation for bonding exceed 2.5%.

3-3.3 Daily Reports
Add the following:

Signature of the daily report by the Inspector shall be deemed only as receipt of the daily report by the City, and by no means be considered an approval of any extra work unless previously agreed to by the Engineer in writing.

3-4 CHANGED CONDITIONS

3-4.1 Disallowance of Entitlement
Add the following subsection:

The Contractor will not be entitled to any adjustment in the Contract Price or Contract Time if:

1. The Contractor knew of the existence of such conditions at the time the Contractor made a commitment to the City in respect to Contract Price and Contract times by the submission of a Bid; or

2. The existence of such condition could reasonably have been discovered during the required site investigation, or revealed as a result of any record search, examination, investigation, exploration, test or study of the Site and surrounding areas suggested or required by the Bidding Documents.

3-5 DISPUTED WORK

Add the following subsections:

3-5.1 Claims:

1. Definition of Claim: A "Claim" means a separate demand by the Contractor for (a) time extension, (b) payment of money or damages arising from work done by or on behalf of the Contractor pursuant to the Contract and payment of which is not otherwise expressly provided for or the claimant is not otherwise entitled to, or (c) an amount the payment of which is disputed by the City.

2. Filing Claim is Not Basis to Discontinue Work: The Contractor shall promptly comply with work under the Contract or work requested by the City even though a written claim has been filed. The Contractor and the City shall make good faith efforts to resolve any and all claims that may arise during the performance of the work covered by this Contract.

3-5.2 Procedure for Claims $375,000 and Under

1. Any formal claim of $375,000 and under shall be processed as follows in accordance with Public Contract Code section 20104 et. seq.:

a. Claims less than $50,000. For claims less than Fifty Thousand Dollars ($50,000.00), the City shall respond in writing to any written claim within forty five (45) days of receipt of the claim, or may request, in writing, within thirty (30) days of receipt of the claim, any additional documentation supporting the claim or relating to defenses to the claim that the City may have against the Contractor. If additional information is thereafter required, it shall be requested and provided upon mutual agreement of the City and the Contractor. The written response of the City to the claim, as further documented, shall be submitted to Contractor within fifteen (15) days after receipt of the further documentation or within a period of time no greater than that taken by Contractor in producing the additional information, whichever is greater.

b. Claims in Excess of $50,000. For claims over Fifty Thousand Dollars ($50,000.00), and less than or equal to Three Hundred Seventy five Thousand Dollars ($375,000.00), the City shall respond in writing to all written claims within sixty (60) days of receipt of the claim, or may request, in writing, within thirty (30) days of receipt of the claim, any additional documentation supporting the claim or relating to defenses to the claim that the City may have against the Contractor. If additional information is thereafter required, it shall be requested and provided by mutual agreement of the City and the Contractor. The written response of the City to the claim, as further documented, shall be submitted to the Contractor within thirty (30) days after receipt of the further documentation, or within a period of time no greater than that taken by Contractor in producing the additional information or requested documentation, whichever is greater.

2. Informal Meet and Confer Conference: If Contractor disputes the written response of the City, or the City fails to respond within the time prescribed,

Contractor may so notify the City, in writing, either within fifteen (15) days of receipt of the City's response or within fifteen (15) days of the failure of the City to respond within the time prescribed, respectively, and demand an informal conference to meet and confer for settlement of the issues in dispute. Upon a demand, the City shall schedule a meet and confer conference within thirty (30) days for settlement of the dispute.

3. Tort Claim: If following the meet and confer conference the claim or any portion remains in dispute, the claimant may file a claim pursuant to Chapter 1 (commencing with Section 900) and Chapter 2 (commencing with Section 910) of Part 3 of Division 3.6 of the Title 1 of the California Government Code. For purposes of those provision, the running of the period of time within which a claim must be filed shall be tolled from the time the claimant submits his/her written claim until the time the claim is denied, including any period of time utilized by the meet and confer conference.

3-5.3 Procedures for Civil Actions to Resolve Disputed Claims:

1. Non-binding Mediation: Within sixty (60) days, but no earlier than thirty (30) days, following the filing of a responsive pleading, the court shall submit the matter to non-binding mediation unless waived by mutual stipulation by both parties. The mediation process shall provide for the selection within fifteen (15) days by both parties of a disinterested third person as mediation, shall be commenced within thirty (30) days of the submittal, and shall be concluded within fifteen (15) days from the commencement of the mediation unless a time requirement is extended upon a good cause shown to the court. If the parties fail to select a mediator within the 15 day period, any party may petition the court to appoint the mediator.

2. Judicial Arbitration: If the matter remains in dispute, the case shall be submitted to judicial arbitration pursuant to Chapter 2.5 (commencing with Section 1141.10) of Title 3 of Part 3 of the California Code of Civil Procedure, notwithstanding Section 1141.11 of the code. The Civil Discovery Act of 1986 (Article 3 (commencing with Section 2016) of Chapter 3 of Title 3 of Part 4 of the Code of Civil Procedure) shall apply to any proceeding brought under this subsection consistent with the rules pertaining to judicial arbitration. Arbitrators shall be experienced in construction law.

3. Appeals: In addition to Chapter 2.5 (commencing with Section 1141.10) of Title 3 of the Code of Civil Procedure), any party appealing an arbitration award who does not obtain a more favorable judgment shall, in addition to payment of costs and fees, also pay the attorneys' fees on appeal of the other party.

4. Interest: In any suit filed pursuant to Public Contract Code Section 20104.4, the City shall pay interest at the legal rate on any arbitration award or judgment. The interest shall begin to accrue on the date the suit is filed in the court of law.

3-5.4 Procedure for Claims Over $375,000:

1. If a dispute in excess of a total value of $375,000, arises out of, or relates to this Contract, or the breach thereof, and if said dispute cannot be settled through normal contract negotiations, the parties agree that as a condition precedent to the initiation of litigation, the dispute shall first be submitted to mediation pursuant to this Section. The mediation is voluntary, non-binding, and intended to provide an opportunity for the parties to evaluate each other's cases and arrive at a mutually agreeable resolution of the dispute. These provisions relating to voluntary mediation shall not be construed or interpreted as mandatory arbitration.

2. Either party may initiate mediation by notifying the other party or parties in writing. A Request for Mediation shall contain a brief statement of the nature of the dispute or claim, and the names, addresses, and phone numbers of all parties to the dispute or claim, and those, if any, who will represent them in the mediation.

3. The mediation process set forth in this Article shall be administered by the American Arbitration Association (AAA) and governed by their rules in effect at the time of filing, or by any other neutral organization agreed to by the parties (hereinafter called "Administrator").

4. The costs for all mediation, including the administrative fees and mediator compensation, will be shared equally by all parties. Fees shall be jointly negotiated by all parties directly with the Administrator. If all parties agree, then the mediation costs may increase as required for resolution of the dispute. The expenses of witnesses for a party shall be paid by the party producing such witnesses.

5. A single mediator, acceptable to all parties, shall be used to mediate the dispute. The mediator will be knowledgeable in construction matters and will be selected from lists furnished by the Administrator. The initial mediation session shall commence within thirty (30) days of filing, unless otherwise agreed by the parties, or at the direction of the mediator.

6. At least ten (10) days before the first scheduled mediation session, each party shall provide the mediator a brief memorandum setting forth its position with regard to the issues that need to be resolved. At the discretion of the mediator, such memoranda may be mutually exchanged by the parties. At the first session, the parties will be expected to produce all information reasonably required for the mediator to understand the issue presented. The mediator may require each party to supplement such information.

7. Mediation hearings will be conducted in an informal manner and discovery will not be allowed unless agreed to by all parties. All discussions, statements, or admissions will be confidential to the proceedings and will not be used for any other purpose as they relate to either party's legal position. There shall be no stenographic record of the mediation.

8. Mediation sessions are private. The parties and their representatives may attend mediation sessions. Other persons may attend only with the permission of the

parties and with the consent of the mediator. The parties may have an attorney present and shall advise the other parties no less than five (5) working days before the mediation of their intent to have an attorney present, so that the other parties may also have their attorneys present.

9. The mediator does not have authority to impose a settlement on the parties but will attempt to assist the parties in reaching a satisfactory resolution of their dispute. The mediator is authorized to conduct joint and separate meetings with the parties and to make oral and written recommendations for settlement. Whenever necessary, the mediator may also obtain expert advice concerning technical aspects of the dispute, provided the parties agree and assume the expenses of obtaining such advice. Arrangements for obtaining such advice shall be made by the mediator or the parties, as the mediator shall determine.

10. The mediator is authorized to end the mediation whenever, in the mediator's judgment, further efforts at mediation would not contribute to a resolution of the dispute between the parties.

11. Any resultant agreements from mediation shall be documented in writing, as agreed upon during the mediation, and may be used as the basis for a change order or other directive as appropriate. All mediation results and documentation shall be non-binding and inadmissible for any purpose in any legal proceedings, unless such admission is otherwise agreed in writing by all parties. Mediators shall not be subject to any subpoena or liability and their actions shall not be subject to discovery in subsequent proceedings.

12. The Mediation shall be terminated by the execution of a Settlement Agreement by the parties; by a written declaration of the Mediator to the effect that further efforts at Mediation are no longer worthwhile; or by a written declaration of a party or parties to the effect that the Mediation proceedings are terminated.

13. If Mediation is unsuccessful in resolving the dispute, the parties thereafter may agree to submit the matter to the Administrator for binding arbitration. The parties agree that the matter shall be submitted to one (1) arbitrator, unless they agree to three (3) arbitrators in writing. The parties further agree that they will faithfully observe this Contract, and that the parties will abide by and perform any award rendered by the arbitrator(s), that a judgment of a court having competent jurisdiction may be entered upon the award, and that such judgment shall be enforceable as a final judgment to the fullest extent under the law. The parties agree to split evenly all arbitration and arbitrator'(s) fees and expenses. The arbitration shall be subject to, and proceed in accordance with California Code of Civil Procedure, section 1280 through 1294.2 if the parties do not agree to submit to binding arbitration, neither party is prevented from pursuing other legal remedies.

14. Any arbitration, mediation or other forms of alternate dispute resolution shall be handled within the boundaries of the City unless otherwise mutually agreed.

3-5.5 Rights and Remedies

The duties and obligations imposed by these Special Provisions and the rights and remedies available hereunder to the parties hereto, and, in particular but without limitation, the warranties, guarantees and obligations imposed upon the Contractor by the Special Provisions and amendments thereto and all of the rights and remedies available to the City thereunder, are in addition to, and are not to be construed in any way as a limitation of, any rights and remedies available to any or all of them which are otherwise imposed or available by laws or regulations by special warranty or guarantee or by other provisions of the Contract Documents, and the provisions of this paragraph will be as effective as if repeated specifically in the Contract Documents in connection with each particular duty, obligation, right and remedy to which they apply.

3-5.6 Arbitration Award

Pursuant to California Government Code Section 818, the Arbitrator shall have no jurisdiction to award punitive or exemplary damages.

3-5.7 Attorney's Fees and Costs

In the event that any arbitration, action, suit or other proceeding is instituted to enforce any provision of this Contract, and/or to remedy, prevent, or obtain relief from a breach of this Contract, the prevailing party shall be entitled to recover all of its attorney's fees and costs incurred in each and every such arbitration, action, suit or other proceeding, including any and all appeals or petitions therefrom, except as may be provided to the contrary above. As used herein, attorney's fees shall be deemed to mean the full actual costs of any legal services actually performed in connection with the matters involved, calculated on the basis of the usual fees charged by the attorneys performing such services and shall not be limited to "reasonable attorney's fees" as defined by any statute or rule of court.

SECTION 5 - UTILITIES

Is amended as follows:

5-1 LOCATION

5-1.1 General

Add the following paragraphs:

The Contractor shall notify the Underground Service Alert of Southern California at least 2 working days prior to any excavation by dialing 811. The area to be excavated shall be clearly marked in white paint and delineated with “USA” and “Contractors Name”.

5-1.2 Private Property Location

Replace sub section with the following:

The Underground Service Alert of Southern California does not locate underground utilities on private property or on City owned properties, therefore the Contractor shall obtain 3rd party utility location services in order to identify any onsite electrical, communication, water, sewer, or irrigation facilities within the project area prior to any excavations. The City will provide the as-built drawings for City owned properties to the

3rd party location service firm and be available for an onsite meeting to answer any question and to provide access to facility utility boxes or utility rooms where applicable. The cost of the 3rd party utility location service shall be included in the applicable bid necessitating such location.

5-1.3 Removal of Utility Markings

Add the following subsection:

The Contractor shall remove all utility markouts upon completion of the work requiring excavation. Utility markouts placed on asphalt concrete shall be blacked out with a traffic grade paint approved for use by the Engineer. Any letters or words shall be blacked out entirely in the shape of a box and not by means of blacking out the letters resulting in the letters being visible in black paint. Utility markouts placed on concrete or masonry surfaces shall be cleaned off or removed by use of pressure washing without damaging the concrete surface or stripping aggregate from the surface. BMP's shall be in place to prevent residual water from entering a drainage system or water course.

5-1.4 Payment

Replace sub section with the following:

Payment for utility location and removal of markings tor shall be included applicable bid items.

5-5 DELAYS

Add the following paragraph:

Should a condition be determined at the time of potholing that would require relocations and/or redesign, a non-compensable time extension will be granted to the Contractor to cover the time associated with the relocation and/or redesign.

5-7 COORDINATION

Add the following subsection:

5-7.1 General

The contractor shall coordinate their work with all respective utility agencies. The Contractor shall immediately notify utility agencies when an existing utility is damaged by the Contractors operation or found to be damaged during the course of the work. The following utilities and their respective owners are listed below:

Facility Type:	Utility Owner:
Communications	AT&T
Communications	Cox Communications
Electric	San Diego Gas and Electric
Gas	San Diego Gas and Electric
Sewer	Padre Dam Municipal Water District
Storm Drain	City of Santee
Traffic Signals	City of Santee
Water Service (Potable)	Padre Dam Municipal Water District

Water Service (Recycled Irrigation)	Padre Dam Municipal Water District
Water Transmission (Potable)	Helix Water District
Water Transmission (Potable)	City of San Diego

5-7.2 Utility Contacts

Utility Agency Business Contacts, Non-Emergency:

AT&T	(800) 422-4133
City of Santee	(619) 258-4100 x 167
Cox Communications	(619) 263-5793
Padre Dam Municipal Water District	(619) 258-4600
San Diego Gas & Electric	(800) 336-7343

Utility Agency Emergency Contacts:

AT&T	(800) 332-1321
City of Santee Duty Pager	(619) 926-1298
Cox Communications	(619) 263-1032
Padre Dam Municipal Water District	(619) 448-3111
San Diego Gas & Electric	(800) 611-7343

SECTION 6 - PROSECUTION, PROGRESS, AND ACCEPTANCE OF THE WORK

Is amended as follows:

6-1 CONSTRUCTION SCHEDULE AND COMMENCEMENT OF THE WORK

6-1.1 Construction Schedule

Delete first sentence and substitute following:

The Contractor shall schedule the Work to cause the least inconvenience to the public and surrounding private properties. The Contractor shall submit a construction schedule to the Engineer for approval within ten (10) days after receipt of the Notice of Award. The Notice to Proceed will be issued after the approval of the construction schedule. Failure by the Contractor to provide a construction schedule within ten (10) days from receipt of the Notice of Award may result in the City deeming a failure by the Contractor to perform to the requirements of the Contract, and the City terminating the contract.

The Construction Schedule shall be prepared in a professional manner with scheduling software such as Microsoft Project, Primivera, or other approved scheduling software program. The Construction Schedule shall clearly outline the start of work, each phase and work type, their subsequent duration, any holidays and non-working days in the contract, and a final completion date. The Contractor shall update the construction schedule and provide to the Engineer by the first working day of each month and in five (5) working days when requested by the Engineer. Failure by the Contractor to provide an updated construction schedule shall result in the withholding of ten percent (10%) of the total value of the amount due to the Contractor for that subsequent monthly

progress pay application for the period in which the construction schedule was not updated. Failure to provide an updated schedule after five (5) working days as requested by the Engineer may result in the suspension of all work until the updated schedule has been provided to the Engineer, and no additional working days will be granted to the Contractor for the suspension period.

The Contractor shall adhere to the construction schedule during the progression of work. Should the Contractor fail to perform work in accordance with the construction schedule where prior notification was required, the Contractor and subcontractors will be directed to stop work, and the Contractor may be charged $500.00 for each half-hour of work performed outside of the approved construction schedule at the discretion of the Engineer.

The Contractor shall diligently schedule and perform all items of work which have seasonal temperature requirements for placement in order to prevent a delay in the work. Failure to schedule and perform items of work required to be completed prior to work with seasonal temperature requirements, shall be considered an avoidable delay, therefore no additional contract time will be granted to the Contractor, thus resulting in the potential assessment of Liquidated Damages.

6-1.3 Working Day

Add following subsection:

A Working Day shall be defined as non-City recognized holiday's occurring from Monday through Friday and when the Contractor is able to work during the first 5 hours of the working day with at least 60% of the normal work force for that particular day of scheduled work.

Deviation from working days and normal working hours will not be allowed without prior written consent of the Engineer.

6-1.4 Work Hours

Add following subsection:

Normal working hours shall be as noted in Section 601-1.2.

No delivery of equipment material shall be permitted outside the normal working hours. Work hours for all work requiring lane closures shall be in conformance to Part 6 "Temporary Traffic Control".

6-1.5 City Recognized Holidays

Add following subsection:

Work shall not be performed on recognized City Holidays unless otherwise approved by the Engineer.

Holidays observed by the City are listed below. If any holiday listed falls on a Saturday, the Saturday and the preceding Friday are both legal holidays. If the holiday falls on a Sunday, both Sunday and the following Monday will be legal holidays:

Holiday	**Observance Date**
New Year's Day	January 1st
Martin Luther King Day	3rd Monday in January
Presidents Day	3rd Monday in February
Memorial Day	Last Monday in May
Independence Day	July 4th
Labor Day	1st Monday in September
Veteran's Day	November 11th
Thanksgiving Day	4th Thursday in November
Day After Thanksgiving Day	4th Friday in November
Christmas Eve	December 24th
Christmas Day	December 25th

6-1.6 Work Outside of Allowable Work Hours

Add following subsection:

If work extends past allowable work hours as defined in Section 6-1.3, at the discretion of the Engineer, the Contractor may be charged up to $500.00 for each half-hour and any portion of work past allowable work hours.

In the event work is allowed by the Engineer outside of the normal working hours, at the request of and for the benefit of the Contractor, inspection service fees may be levied against the Contractor at a rate of $100.00 per hour, including travel time where applicable. Failure by the Contractor to pay for these services shall result in the withholding of the amount due to the City from the final payment and/or the withholding of retention funds due to the Contractor.

All streets shall be fully open to the public at the end of each work day. The Contractor may be charged up to $500.00 for each half-hour and any portion of streets that are not fully open to the public.

The above charge may also be levied if inspection services are deemed necessary by the Engineer as a matter of public safety or to otherwise ensure the quality of the Work.

6-2 PROSECUTION OF THE WORK

Add the following:

The Contractor shall diligently schedule and prosecute all items of work to reduce disturbances to adjacent property owners, roadway traffic and pedestrian access facilities. When certain improvements within this contract have multiple sequential phases of work including but not limited to; underground work, concrete work, asphalt repair work, asphalt overlays and roadway surface treatments; no more than 5 working days delay between each phase of work shall be permitted unless otherwise approved by the Engineer. It is the intent of this section for the Contractor to mobilize, perform all required work, clean up, and demobilize in the least amount of time necessary for each street or individual site location to reduce impacts to City residents. These requirements will be taken into consideration by the Engineer when reviewing the submitted Construction Schedule prior to approval.

6-6 DELAYS AND EXTENSIONS OF TIME

6-6.1 General

6-6.1.1 Avoidable Delays

Add the following subsection:

Avoidable delays in the prosecution of the Work shall include delays which could have been avoided with the exercise of care, prudence, foresight, scheduling, and diligence on the part of the Contractor or its subcontractors, at any tier level, or their suppliers.

6-6.1.2 Unavoidable Delays

Add the following subsection:

Unavoidable delays in the prosecution or completion of the Work shall include delays which result from causes beyond the control of the Contractor and which could not have been avoided by the exercise of care, prudence, foresight, scheduling and diligence on part of the Contractor, their subcontractors, at any tier level, or their suppliers.

6-6.1.3 Abnormal Delays

Add the following subsection:

Abnormal delays caused by acts of God, war, fire, unusual storms, floods, tidal wave, earthquakes, strikes and freight embargo shall be considered as unavoidable delays such that they prevented the Contractor or their subcontractors from proceeding with at least 60% of the normal labor and equipment forces for at least 5 hours per day toward the completion of the current critical path activity item(s) on the approved construction schedule.

6-6.2 Extension of Time

Add the following paragraph:

Any additional time granted to secure material will be at the discretion of the Engineer after a schedule is submitted for approval. It shall be the sole responsibility of the Contractor to ensure that the materials ordered, scheduled, manufactured and delivered are on time.

The City, and only the City, will determine which days, if any, may be considered rain days. Such days will be indicated on the Weekly Statement of Working Days. The Contractor shall be entitled to an extension of working time under this contract only when claim for such extension is submitted to the City in writing within seven (7) days from and after the time when any alleged cause of delay shall occur; and only when such time is approved by the City.

6-6.3 Payment for Delays

Delete this section and replace with the following:

Pursuant to Section 7102 of the Public Contract Code, the Contractor will only be compensated for damages incurred due to delays caused by the City. Such actual costs will be determined by the Engineer. The City will not be liable for damages which

the Contractor could have avoided by any reasonable means, such as judicious handling of forces, materials, equipment, suppliers, plants, or their subcontractors. The determination of what damages the Contractor could have avoided will be made by the Engineer.

6-6.4 Written Notice and Report

The Contractor shall be entitled to an extension of time or payment for delay under this contract only when claim for such extension is submitted to the City in writing within seven (7) days from and after the time when any alleged cause of delay began; and only when such time or payment is approved by the City. The Contractor shall submit a written report to the Engineer outlining their justification for additional time or payment requested within 30 days from the beginning of the delay. Failure by the contractor to files these items within the times specified will be considered grounds for refusal by the City to consider such request.

6-7 TIME OF COMPLETION

6-7.1 General

Add the following paragraph:

By submitting a bid, the Contractor acknowledges and agrees that the construction duration stipulated herein is adequate and reasonable for the size and scope of the Project.

All work described in these specifications shall be completed in **25 Working Days** from the start of work as stated in the City's Notice to Proceed. This time includes the completion of all punch list items, submission of any required operation & maintenance manuals, and warranties required for the contract.

6-7.2 Notice to Proceed

Add the following subsection:

The City will issue to the Contractor a "Notice to Proceed" upon receipt of the executed contract agreement, all required bonds, liability insurance, approval of the construction schedule, and approval of the Contractors representative. This notice shall state the start of work from which each working day therefore will be charged Contract time. Failure by the Contractor to start the work within 10 working days from the date stipulated in the Notice to Proceed shall be deemed as failure to prosecute the work and therefore be cause for City to terminate the Contract for default.

6-8 COMPLETION, ACCEPTANCE AND WARRANTY

6-8.1 Completion

6-8.1.2 Walk-through and Punch List Procedure

The Contractor shall request a walk-through by the Engineer, no later than 15 working days prior to the end of Contract time. The Engineer will perform the walk-through

within 5 workings days from request by the Contractor. The following items are required prior to requesting a walk through.

1. Remove temporary facilities from the site.
2. Thoroughly clean the site.

After completion of the above items, the Engineer with begin the walkthrough. If the Engineer begins to generate a punch list and finds the Work is not substantially complete as defined herein, the Engineer will terminate the walk-through and notify the Contractor in writing. Upon completion of the walkthrough, the Engineer will submit to the Contractor the final punch list with the items required for correction prior to acceptance of the work. All punch list items are to be completed within 10 working days from receipt of the punch list by the Engineer. No additional contract time will be granted to complete punch list items.

6-8.2 Acceptance

Acceptance will occur after all of the requirements contained in the Contract Documents have been fulfilled. If, in the Engineer's judgment, the Contractor has fully performed the contract, the Engineer will recommend to the City Council that the project be accepted as complete and file a Notice of Completion.

6-8.3 Warranty

Add the following:

The Contractor shall warrant all work including components for a period of 1 year.

Nothing in here is intended to limit any manufacturer's warranty which provides the City with greater warranty rights than set forth in this section or further stipulated in the Contract Documents. These specifications are not intended to constitute a period of limitations or waiver of any other rights or remedies the City may have regarding the Contractors obligations under the Contract Documents or federal or state law.

6-8.3.1 Defective Work

Add the following subsection:

The Contractor shall respond and initiate corrective action within 24 hours of notice of nonconforming Work that poses an imminent threat to persons or property.

If the Engineer finds the Work, or any port of the Work to be defective, whether or not manufactured, fabricated, installed, completed or overlooked and accepted by the Engineer, the Contractor must, in accordance with the Engineer's written instructions and within the specified time limits, either correct the Defective Work, or, if it has been rejected by the Engineer, remove it from the Site and replace it with non-defective and conforming work.

If, upon notice, the Contractor fails to immediately correct the Defective Work, or the Contractor fails to correct the Defective Work in a manner conforming to the Contract Documents, the Engineer may order the Contractor to stop all or part of the Project. The City's right to stop the Project does not give rise to any duty on the City's part to

stop Work for the Contractor's benefit or the benefit of any other party. The Contractor shall bear all direct and indirect costs and damages that result from the City's stop work notice.

The Engineer may determine in their sole discretion to accept Defective Work in lieu of requiring the Contractor to correct or remove and replace the Defective Work. The Contractor must bear all direct and indirect costs of the Defective Work, and the diminished value to the project, as determined by the Engineer. If the Engineer's acceptance of the Defective Work occurs prior to Final Payment, the Engineer will issue a Change Order incorporating the necessary revisions in the Contract Documents with respect to the Defective Work and affording the City the appropriate decrease in the Contract Price.

If the Contractor fails to correct, remove, or replace Defective Work within 5 Working Days from the date of written notice from the Engineer, the Engineer may proceed expeditiously with any correction of Defective Work undertaken in accordance with this Section. The City may remedy at a sooner time in the event of an emergency. The City may remedy after 5 Working Days from the date of written notice when the Contractor fails to correct the Defective Work in accordance with the Contract Documents, or when the Contractor fails to comply with any other provisions of the Contract Documents.

When undertaking remedial action under this section, the City may: exclude the Contractor all or part of the Site; take possession of all or part of the Work, and suspend the Contractor's Work and or Services; and incorporate into the project all material and equipment stored at the Site for which the City has paid but the Contractor has stored elsewhere.

The City will not grant an extension of Contract Time or milestones because of any delay in the performance of the Project attributable to the City's undertaking remedial action to correct defective work.

The Contractor must repair or replace traffic signal and lighting system equipment within 72 hours after notification of defects by the Engineer.

The Contractor shall be responsible for any claims, costs, losses, and damages incurred by the City in remedying any deficiency e.g., all costs of repair and/or replacement of Defective Work and all costs of repair of any other Work on the Project destroyed or damaged by correction, removal, or replacement of the Contractors Defective Work.

6-8.3.2 Warranty Format Requirements

Add the following subsection:

Written warranties, except manufacturer's standard printed warranties, must be on the Contractor's, their agents', material suppliers', installers', or manufacturers' own letterhead addressed to and for the City's benefit. Submit all warranties in the format described in this section, modified as approved by the Engineer to suit the conditions pertaining to the warranty.

The Contractors shall obtain warranties, executed in triplicate by responsible Subcontractors and suppliers, within 10 Working days after completion of the applicable item of Work. Except for items put into use with the Engineer's permission with date mutually agreed upon in writing, ensure the beginning time of all warranties is the Project Completion date. The Contractor shall retain all warranties until the time specified for submittal to the Engineer.

Warranties shall be signed by the Contractor and the appropriate agent.

6-8.3.3 Correction of Work During the Warranty Period
Add the following subsection:

If within 1 year after the date for commencement of warranties under the Contract Documents, any item of Work is found to be Defective Work, the Contractor must correct it promptly after receipt of written notice from the City to do so. This period of 1 year must be extended with respects to portions of the Work corrected as part of the warranty requirements.

6-9 LIQUIDATED DAMAGES
Delete entire subsection and substitute following:

Work shall be commenced within ten (10) days of the date stated in the City's Notice to Proceed and shall be completed by Contractor within the Contract Time(s) set forth in Section 6.7 "Time of Completion" and additionally stated in Article IX of the Contract Agreement. If the Work is not completed within the Contract Time(s), it is understood that the City will suffer damage, and that is and will be difficult and/or impossible to ascertain and determine the actual damage which the City will sustain in the event of and by reason of the Contractor's failure to complete the Work within the Contract Time. In accordance with Government Code section 53069.85, it is agreed that Contractor shall pay to the City **Five hundred Dollars** (**$500.00)** per calendar day as fixed and liquidated damages, and not as a penalty, the sum stipulated in the Contract for each Day of delay until the Work is fully completed. Contractor and its surety shall be liable for any liquidated damages. Any money due or to become due the Contractor may be retained to cover liquidated damages.

6-10 USE OF IMPROVEMENTS DURING CONSTRUCTION
Add the following:

Whenever any part of the work is in a condition suitable for use, and the best interest of the City requires such use, the City may take possession of, connect to, open for public use, or use a part thereof. When so used, maintenance and repairs due to ordinary wear and tear or vandalism will be made at City's expense. The use by the City as contemplated in this Article shall in no case be construed as constituting acceptance of the work or any part thereof or relieving the Contractor of the requirement to compete all items of work within Contract Time. Such use shall neither relieve the Contractor of any of his responsibilities under the Contract nor act as a waiver by the City of any of the conditions thereof. Contractor shall continue to maintain all insurance on the Project.

6-11 RIGHT TO AUDIT
Add the following subsection:

6-11.1 The City's Right

Add the following subsection:

The City retains the right to review and audit, and the reasonable right of access to the Contractor and all subcontractor's premises to review and audit the Contractors compliance with the provisions of the Contract (City's Right). The City's Right includes the right to inspect and photocopy same, and to retain copies, outside of the Contractor's premises, of any and all records with appropriate safeguards, if such retention is deemed necessary by the City in its sole discretion. The City will keep this information in strictest confidence.

The Contractor shall include the City's Right in the Subcontracts and ensure that these specifications are binding upon all Subcontractors.

6-11.2 Audit

Add the following subsection:

The City's Right includes the right to examine any and all books, records, documents and any other evidence of procedures and practices that the City determines is necessary to discover and verify that the Contractor and all Subcontractors are in compliance with all requirements under this Contract.

If there is a claim for additional compensation or for changes in the Work, the City's Right to Audit includes the right to examine books, records, documents, and any and all other evidence and accounting procedures and practices that the City determines is necessary to discover and verify all direct and indirect costs, of whatever nature, which are claimed to have been incurred, anticipated to be incurred, or for which a claim for additional compensation or for changes in the Work have been submitted.

The Contractor shall maintain complete and accurate records in accordance with generally accepted accounting practices in the construction industry. The Contractor shall make available to the Engineer for review and audit all Project related accounting records and documents, and any other financial data. Upon the Engineer's request the Contractor must submit exact duplicates of original of all requested records to the Engineer.

6-11.3 Compliance Required Before Mediation and Litigation

Add the following subsection:

As a condition precedent to proceeding with mandatory mediation and further litigation under Section 3-5 "Disputed Work" the Contractor shall comply with the audit specifications within 60 days of the Engineer's notice to review and audit compliance. Notice shall be provided in accordance to Section 2-12 "Special Notices".

SECTION 7 - RESPONSIBILITIES OF THE CONTRACTOR

Is amended as follows:

7-1 THE CONTRACTORS EQUIPMENT AND FACILITES

7-1.1 General

Add the following:

Enclosed temporary toilet facilities shall be locked at the end of each work day to prevent usage by the public and to prevent vandalism. Location of temporary toilet facilities shall be approved by the City.

7-1.2 Temporary Utility Service

Add the following:

The Contractor is responsible for all temporary utility services e.g. electrical, gas, potable water, recycled water, sewer, phone, cable, internet and all other utilities required for construction and maintenance activities.

Payment for temporary utility services necessary for the Contractor's field trailers, direct and indirect overhead shall be included in the unit price bid for **"Mobilization"**. Payment for temporary utility services directly required for the construction of the Work shall be included in the various bid items.

7-2 LABOR

7-2.1 General

Delete entire subsection and substitute following:

Only competent workers shall be employed on the Work. Any person employed by the Contractor, any Subcontractor who is found to be incompetent, intemperate, troublesome, disorderly, hostile, or otherwise objectionable, or who fails to perform the work properly and acceptably, shall be immediately removed from the Work by the Contractor and shall not be reemployed on the Work. The Engineer shall make the sole determination of employees to be removed from the Work.

7-2.2 Prevailing Wage

Delete entire subsection and substitute the following:

The Contractor shall comply with Labor Code Sections 1774 and 1775. In accordance with said Section 1775 the Contractor shall forfeit as a penalty to the in the amount as defined in Section 1775, $200 for each calendar day or portion thereof, for each workman paid less than the prevailing rates as determined by the Director of Industrial Relations for such work or craft in which such workman is employed for any work done under the Contract by him or by any Subcontractor under him in violation of the provisions of the Labor Code and in particular, Labor Code Sections 1770 to 1780, inclusive. In addition to said penalty and pursuant to said Section 1775, the difference between such prevailing wage rates and the amount paid to each workman for each calendar day or portion thereof for which each workman was paid less than the prevailing wage rate shall be paid to each workman by the Contractor.

Pursuant to the provisions of Section 1773 of the Labor Code of the State of California, the City has obtained the general prevailing rate of wages (which rate includes

employer payments for health and welfare, pension, vacation, travel time, and subsistence pay as provided for the Section 1773.1 of said Code, apprenticeship or other training programs authorized by Section 3093 of said Code, and similar purposes) applicable to the work to be done, for straight time, overtime, Saturday, Sunday and holiday work. The holiday wage rate listed shall be applicable to all holidays recognized in the collective bargaining agreement of the particular craft, classification or type of workmen concerned.

Pursuant to Section 1773.2 of the Labor Code, general prevailing wage rates shall be posted by the Contractor at a prominent place at the site of the Work.

7-2.3 Payroll Records

Delete entire subsection and substitute the following:

Pursuant to Labor Code section 1776, the Contractor and each Subcontractor shall maintain weekly certified payroll records showing the name, address, social security number, work classification, straight time and overtime hours paid each day and week, and the actual per diem wages paid to each journeyman, apprentice, worker or other employee employed in connection with the Work. Contractor shall certify under penalty of perjury that records maintained and submitted by Contractor are true and accurate. Contractor shall also require Subcontractor(s) to certify weekly payroll records under penalty of perjury.

1. Each Contractor and Subcontractor shall keep an accurate payroll record, showing the name, address, social security number, work classification, straight time and overtime hours worked each day and week, and the actual per diem wages paid to each journeyman, apprentice, worker, or other employee employed by him or her in connection with the public work.

2. The payroll records enumerated under subdivision (1) shall be certified and shall be available for inspection at all reasonable hours at the principal office of the Contractor on the following basis:

a. A certified copy of an employee's payroll record shall be made available for inspection or furnished to the employee or his or her authorized representative on request.

b. A certified copy of all payroll records enumerated in subdivision (1) shall be made available for inspection and furnished upon request within 10 days from request to the City or their authorized representative, the Division of Labor Standards Enforcement, and the Division of Apprenticeship Standards of the Department of Industrial relations.

c. A certified copy of all payroll records enumerated in subdivision (1) shall be made available upon request by the public for inspection or copies thereof made; provided, however, that a request by the public shall be made through either the City, the Division of Apprenticeship Standards, or the Division of Labor Standards Enforcement. If the requested payroll records have not been provided pursuant to paragraph (b), the requesting party shall, prior to being provided the records, reimburse the costs of preparation by the Contractor, Subcontractors, and the

entity through which the request was made. The public shall not be given access to the records at the principal office of the Contractor.

3. Each Contractor shall file a certified copy of the records enumerated in subdivision (1) with the entity that requested the records within 10 days after receipt of a written request.

4. Any copy of records made available for inspection as copies and furnished upon request to the public or any public agency by the awarding body, the Division of Apprenticeship Standards, or the Division of Labor Standards Enforcement shall be marked or obliterated in such a manner as to prevent disclosure of an individual's name, address and social security number. The name and address of the Contractor awarded the contract or performing the contract shall not be marked or obliterated.

5. The Contractor shall inform the City of the location of the records enumerated under subdivision (1), including the street address, City and county, and shall, within five working days, provide a notice of a change of location and address.

6. In accordance with Labor Code Section 1771.4, the Contractor and each Subcontractor shall furnish the certified payroll records directly to the Department of Industrial Relations on a weekly basis and in the format prescribed by the Department of Industrial Relations, which may include electronic submission. Contractor shall comply with all requirements and regulations from the Department of Industrial Relations relating to labor compliance monitoring and enforcement.

7. In the event of noncompliance with the requirements of this section, the Contractor shall have 10 days in which to comply subsequent to receipt of written notice specifying in what respects the Contractor must comply with this section. Should noncompliance still be evident after the 10 day period, the Contractor shall, as a penalty forfeit one-hundred dollars ($100) for each calendar day, or portion thereof, for each worker, until strict compliance is effectuated. Upon the request of the Division of Apprenticeship Standards or the Division of Labor Standards Enforcement, these penalties shall be withheld from progress payments then due."

The penalties specified in subdivision (f) of Labor Code Section 1776 for noncompliance with the provisions of said Section 1776 may be deducted from any moneys due or which may become due to the Contractor.

The Contractor and each Subcontractor shall preserve their payroll records for a period of three (3) years from the date of completion of the contract.

7-2.4 Hours of Labor

Delete entire subsection and substitute following:

Eight hours labor constitutes a legal day's work. The Contractor shall forfeit, as a penalty, $25 for each workman employed in the execution of the contract by the Contractor or any Subcontractor under him for each calendar day during which such

workman is required or permitted to work more than 8 hours in any one calendar day and 40 hours in any one calendar week in violation of the provisions of the Labor Code, and in particular, Section 1810 to Section 1815, thereof, inclusive, except that work performed by employees of Contractor or any Subcontractor in excess of 8 hours per day, and 40 hours during any one week, shall be permitted upon compensation for all excess hours worked at not less than one and one half times the basic rate of pay, as provided in said Section 1815.

7-2.5 Apprentices

Add the following subsection:

Attention is directed to Section 1777.5, 1777.6 and 1777.7 of the California Labor Code and Title 8, California Code of Regulations, Section 200 et seq. The Contractor shall abide by all requirements with respect to the employment of apprentices on for the work.

7-2.6 Debarment of Contractors and Subcontractors

Add the following subsection:

The Contractor, or any Subcontractor working under the Contractor, may not perform work on a public works project with a Subcontractor who is ineligible to perform work on a public project pursuant to Section 1777.1 or Section 1777.7 of the California Labor Code. Any contract on a public works project entered into between the Contractor and a debarred Subcontractor is void as a matter of law. A debarred Subcontractor may not receive any public money for performing work as a Subcontractor on a public works contract. Any public money that is paid, or may have been paid to a debarred Subcontractor by the Contractor on the project shall be returned to the City. The Contractor shall be responsible for the payment of wages to workers of a debarred Subcontractor who has been allowed to work on the project.

7-3 LIABILITY INSURANCE

Delete entire subsection and substitute with the following:

7-3.1 Indemnity

To the fullest extent permitted by law, Contractor agrees to indemnify, defend (with counsel of City's choosing) and hold harmless the City and its officers, employees and elected and appointed officials, and volunteers (each, an "Indemnified Party") from and against any and all liabilities (including without limitation all claims, losses, damages, penalties, fines, and judgments, associated investigation and administrative expenses, and defense costs, including but not limited to reasonable attorneys' fees, court costs and costs of alternative dispute resolution) regardless of nature or type or whether the allegations are false, fraudulent, or groundless, expressly including but not limited to those arising from bodily injury (including death) or property damage, arising out of, related to, or in connection with the Work or this Contract, including claims made by subcontractors for nonpayment, and including without limitation the payment of all consequential damages and other related costs and expenses. Contractor shall defend, at Contractor's own cost, expense and risk, with counsel of City's choosing, any and all such suits, actions or other legal proceedings of every kind that may be brought or instituted against City, its officials, officers, agents, employees and representatives.

Contractor shall pay and satisfy any judgment, award or decree that may be rendered against City, its officials, officers, agents, employees and representatives, in any such suit, action or other legal proceeding. Contractor shall reimburse City, its officials, officers, agents, employees and representatives for any and all legal expenses and costs incurred by each of them in connection therewith or in enforcing the indemnity herein provided. The only limitations on this provision shall be those imposed by Civil Code Section 2782.

If Contractor's obligation to defend, indemnify, and/or hold harmless arises out of Contractors performance as a "design professional" (as that term is defined under Civil Code section 2787.8), then, and only to the extent required by Civil Code section 2782.8, which is fully incorporated herein, Contractor's indemnification obligation shall be limited to claims that arise out of, pertain to, or relate to the negligence, recklessness, or willful misconduct of the Consultant, and, upon Contractor obtaining a final adjudication by a court of competent jurisdiction, Contractor's liability for such claim, including the cost to defend shall not exceed the Contractor's proportionate percentage of fault.

7-3.2 Insurance

Without limiting the Contractor's indemnification of the City, the Contractor shall provide and maintain at its own expense, during the term of this Agreement, or as may be further required herein, the following insurance coverage and provisions.

7-3.2.1 Evidence of Coverage

Prior to the execution of the Contract, the Contractor shall file with the City original certificates and amendatory endorsements, copies of applicable insurance language, or other evidence of insurance from an insurer or insurers the effecting coverage of all insurance required herein. All evidence of insurance shall be signed by a properly authorized officer, agent or qualified representative of the insurer and shall certify the names of the insured, any additional primary insured's, when appropriate, the type and amount of the insurance, the location and operation to which the insurance applies, and the expiration date of such insurance. The City shall be named as an additional insured on the Commercial General Liability policy, and, if the Project involves environmental hazards, on the Pollution/Asbestos Liability policy using form 2010 1185 or equivalent. Any subconsultant, subcontractor or similar entity performing work on the Project must add the City as an additional insured using CG form 20 38, or broader coverage.

The Contractor shall verify that all subcontractors meet the minimum insurance requirements and provide copies of such policies naming the City as an additional insured to the City prior to the start of work.

The Contractor shall not proceed with the work under the Agreement until it has obtained all insurance required and such insurance has been approved by the City. This approval of insurance shall neither relieve nor decrease the liability of the Contractor.

7-3.2.2 Qualifying Insurers

All policies required must be issued by acceptable insurance companies, as determined by the City, which satisfy the following minimum requirements:

Insurance carriers shall be qualified to do business in California and maintain an agent for process within the State. Such insurance carriers shall have not less than an "A" policyholder's rating and a financial rating of not less than "Class VII" according to the latest Best's Key Rating Guide. Due to market fluctuations in the Workers Compensation sector, the City reserves the right and at its sole discretion to review and accept the Contractor's proposed Workers Compensation Insurance.

7-3.2.3 Minimum Policy Limits Required

The following insurance limits are required for the Contract:

Policy Requirements	Combined Single Limit
Commercial General Liability	**$2,000,000** per occurrence/ **$4,000,000** aggregate for bodily injury, personal injury and property damage
Automobile Liability	**$1,000,000** per occurrence for bodily injury and property damage
Workers Compensation / Employer's Liability	**$1,000,000** per occurrence
All Policies	If Contractor maintains higher limits than the minimums shown above, the City requires and shall be entitled to coverage for the higher limits maintained by Contractor. Any available insurance proceeds in excess of the specified minimum limits of insurance and coverage shall be available to the City.

7-3.2.4 Insurance Required

7-3.2.4.1 Commercial General Liability

Contractor shall take out and maintain, during the performance of the work under this Contract and for twelve (12) months following the completion of all work, in amounts not less than specified in the Contract Documents, Commercial General Liability Insurance, in a form with insurance companies acceptable to the City. Coverage for Commercial General Liability shall be at least as broad as the following:

Insurance Services Office Commercial General Liability coverage (Occurrence Form CG 0001)

Commercial General Liability Insurance shall include coverage for the following:

a. Bodily Injury (including death) and Property Damage
b. Personal Injury/Advertising Injury
c. Premises and Operations
d. Products / Completed Operations Liability
e. Aggregate Limits that apply per contract.
f. Contractual Liability with respect to this Contract
   (If the Contractor is working near a railroad or light rail operation, any exclusion as to performance of operation within the vicinity of any railroad bridge, trestle, track, roadbed, tunnel, underpass or crossway shall be deleted.)
g. Explosion, Collapse, and Underground Hazards (X, C, and U)
h. Independent Contractors Coverage
i. Broad Form Property Damage
j. Sexual Misconduct, with no applicable sublimit
k. Severability of Interest clause providing that the coverage applies separately to each insured except with respect to the limits of liability.

All such policies shall name the City, the City Council, its officers, employees, agents, and volunteers as Additional Insured under the policy.

The general liability policy may utilize either deductibles or provide coverage excess of a self-insured retention, subject to written approval by the City.

Should an Umbrella Policy be utilized in addition to the Commercial General Liability policy to meet the minimum coverage limits, the City shall be named as additional ensured and be endorsed onto the Umbrella Policy.

7-3.2.4.4.2 Automobile Liability

At all times during the performance of the Work under this Contract, and for twelve (12) months following the completion of all work, the Contractor shall maintain Automobile Liability Insurance for bodily injury(including death) and property damage including coverage for owned, non-owned, and hired vehicles, in a form and with insurance companies acceptable to the City.

Coverage for automobile liability insurance shall be at least as broad as Insurance Services Office Form Number CA 0001 (ed. 6/92) covering automobile liability, Code 1 (any auto). The automobile liability program may utilize deductibles, but not a self-insured retention, subject to written approval by the City.

All such policies shall name the City, the City Council, its officers, employees, agents, and volunteers as Additional Insured under the policy.

7-3.2.4.4.3 Workers' Compensation / Employer's Liability

At all times during the performance of the work under this Contract, and for twelve (12) months following the completion of all work, the Contractor shall maintain workers' compensation in compliance with applicable statutory requirements and Employer's

Liability Coverage in amounts not less than the limits specified in the Contract Documents.

Such Insurance shall include an insurer's Waiver of Subrogation in favor of the City and will be in a form and with insurance companies acceptable to the City.

If insurance is maintained, the workers' compensation and employer's liability program may utilize either deductibles or provide coverage excess of a self-insured retention, subject to written approval by the City.

Before beginning work, the Contractor shall furnish to the City satisfactory proof that he or she has taken out for the period covered by the work under this Contract, full compensation insurance for all persons employed directly by Contractor or through Subcontractors in carrying out the work contemplated under this Contract, all in accordance with the "Workers' Compensation and Insurance Act," Division IV of the Labor Code of the State of California and any acts amendatory thereof.

Pursuant to the requirements of Section 1860 of the Labor Code, the Contractor will be required to secure the payment of worker's compensation to his employees in accordance with the provisions of Section 3700 of the Labor Code.

Prior to the commencement of work, the Contractor shall sign and file with the Engineer a certification in the following form:

> *"I am aware of the provisions of Section 3700 of the Labor Code which require every employer to be insured against liability for worker's compensation or to undertake self-insurance in accordance with the provisions of that code, and I will comply with such provisions before commencing the performance of the work of this contract."*

Said certification is included in the Workers' Compensation Insurance Certificate which must be signed and filed with the City prior to performing any work under this contract.

7-3.2.5 Policy Provisions Required

The City, as an additional insured, shall be expressly endorsed onto each policy as a cancellation notice recipient such that the City shall receive a copy of any cancellation notice in the event any policy is cancelled.

General Commercial Liability and Automobile Liability insurance policies shall contain a provision stating that the Contractor's policies are primary insurance and that the insurance of the City or any named additional insurers, shall not be called upon to contribute any loss.

7-4 LICENSING

Add the following subsection:

The Contractor and their subcontractors shall be responsible to procure all required licensing necessary to perform the work in accordance to all Federal, State and local laws and requirements.

7-4.1 Business Licensing

The Contractor and all subcontractors shall obtain a business license with the City of Santee to perform business with the City of Santee. The Contractor and their subcontractors shall be responsible to pay for the business licensing fees.

7-5 PERMITS

Delete first sentence and substitute with the following:

The Contractor shall be responsible to procure all permits required to perform the work including a permit from the State Division of Industrial Safety for excavations five (5) feet in depth or greater.

7-5.1 City Encroachment Permit

No work is permitted without an approved Encroachment Permit. Contractor may obtain the Encroachment Permit application at the Department of Development Services, Building 4, 10601 Magnolia Avenue, Santee, CA, 92071. The issuance fee for the encroachment permit will be waived.

7-5.3 Building Permit

The City will obtain a building permit and be responsible for completing the permit application and providing all required plans, calculations, and applicable documentation required for issuance of the building permit. The cost of the building permit will be paid for by the City.

7-6 THE CONTRACTOR'S REPRESENTATIVE

Add the following paragraph:

The Contractor's representative shall be a full time field supervisor with a minimum of 5 years supervisory experience in the type of Contract Work being performed, and additional 10-years of similar construction experience. The Contractor's representative shall be the jobsite at all times during construction. The Contractor's representative shall also be on site when work is being performed by Subcontractors and be available at all reasonable times during the work day for consultation with the City unless otherwise approved by the Engineer.

The Contractor shall submit to the City for review the Contractor's representative's name, work experience, education, professional certifications, and at least 5 references from similar work completed within the past 3 years. Contractor shall submit these qualifications no later than 48-hours from the bid date for review and approval by the City. Should the submitted representative be rejected by the City, the Contractor shall resubmit a qualified representative within 72 hours from notice by City.

The City reserves the right to direct the Contractor to substitute the Contractor's representative when work has not been performed in accordance to the Contract Documents. The following items are grounds by the City for removal of the Contractor's representative.

a) Failure by the Contractor's representative to maintain a safe work site to workers and/or the public.
b) Demonstration by the Contractor's representative to not fully understand means, methods, procedures and materials required to correctly perform the work.
c) Refusal by the Contractor's representative when directed by the Engineer to perform the work or provide corrective actions for deficient work.
d) When the work performed under the supervision of the Contractor's representative is continually determined to be faulty, defective and/or failing to be in conformance with the Contract documents.

At all times during the working day, the Contractor shall maintain sufficient staff and communication facilities for the Contractors representative to receive and respond to complaints from the public concerning their work and to immediately inform the field supervisor of conditions which require prompt action. A telephone answering service does not meet this requirement.

The Contractor shall furnish the City with the names, addresses, business & mobile telephone numbers of two people responsible for the maintenance of barricades, traffic control signs, lights and other safety devices on a 24 hour basis. Contact person shall have the ability of arriving to the work site within 1 hour from being contacted.

7-6.1 Project Meetings

Add the following subsection:

The Contractors representatives (field supervisor, superintendent and project manager) shall attend scheduled construction meetings as required by the Engineer. If any of the Contractor's staff cannot attend the meeting, the Contractor shall notify the Engineer a minimum of 24 hours in advance, prior to the start of the scheduled meeting. Failure to provide the required notification, the Contractor shall pay for the costs of the City's staff, consultants, or both that were to attend the meeting. The Contractor will be charged a minimum of 1 hour of the Engineer's time plus the time of the City's other employees or representatives that were to attend the meeting.

7-6.1.1 Payment

Payment for attendance of project meetings shall be included in various bid items. The Engineer will deduct costs assessed to the Contractor for not attending meetings from the monthly progress payment in accordance with Section 7-6.1.

7-7 COOPERATION AND COLLATERAL WORK

Add the following paragraph:

Pursuant to Public Contract Code Section 9201, the City shall provide Contractor with timely notification of the receipt of any third-party claim, relating to the Contract. City is entitled to recover its reasonable costs incurred in providing such notification.

7-8 WORK SITE MAINTENANCE

7-8.1 General

Add the following:

The Contractor shall sweep and keep clean all work areas within the Work site at least once each working day or a required to maintain a clean work site.

7-8.2 Air Pollution Control

Add the following paragraph:

During construction, idling time shall be limited to a maximum of 5 minutes for all diesel powered equipment. Signs shall be posted in the designated queuing areas of the construction site to limit idling to a maximum of 5 minutes.

7-8.3 Noise Control

Add the following paragraph:

The Contractor shall comply with all local sound control and noise level rules, regulations and ordinances which apply to any work performed pursuant to the Contract.

Each internal combustion engine, used for any purpose on the job or related to the job, shall be equipped with a muffler of a type recommended by the manufacturer. No internal combustion engine shall be operated on the project without said muffler. The noise level from the Contractor's operations shall not exceed 75 dBA.

7-8.4 Storage of Equipment and Materials

7-8.4.1 General

Delete this subsection and replace with the following:

The City is not providing storage, staging or stockpiling area for this project. It is the Contractor’s responsibility to provide a suitable location for this purpose. These sites shall be clean and free of objectionable materials and be located outside of any City property and street right-of-way. Arrangement for these sites shall be the responsibility of the Contractor. If on private property, a copy of the written agreement shall be provided to the Engineer prior to commencing operations.

No materials, tool or equipment shall be placed such that they block any sidewalks, pedestrian ramps, driveways, staircases or roadways unless otherwise approved by the Engineer. All materials for disposal shall be removed from the work site at the end of each work day. All materials, tools, and equipment shall be removed from the Work site as soon as they are no longer necessary. All materials, equipment, tools and sanitation facilities shall be protected and surrounded by a 6’ tall temporary chain link fence with windscreen to protect the storage area from access by the public at all times and provide a neat clean appearance. All fencing shall be properly secured to prevent overturning.

Before inspection by the Engineer for final acceptance, the storage area and surrounding work site shall be cleared of all equipment, unused materials, debris and rubbish so as to present a satisfactory clean and neat appearance

7-8.6 Water Pollution Control

7-8.6.1 General

Add the following:

The Contractor shall comply with the requirement of the Construction General Permit as applicable for construction activity that results in land disturbance.

7-8.6.1.1 Water Pollution Prevention

Add the following subsection:

The Contractor shall exercise every reasonable precaution to protect storm drain inlets, streams, lakes, reservoirs, bays, and coastal waters from pollution with fuels, oils, bitumens, calcium chloride, other harmful materials, and shall conduct and schedule operations so as to prevent muddying and silting of said streams, lakes, reservoirs, bays, and coastal waters.

Water pollution control work is intended to provide prevention, control, and abatement of water pollution to streams, waterways, and other bodies of water, and shall consist of constructing those facilities which may be shown on the plans, these specifications, as required by the Engineer, or as required in the SWPPP.

In order to provide effective and continuous prevention of water pollution, it may be necessary for the Contractor to perform the contract work in small or multiple units, on an out of phase schedule, and with modified construction procedures. The Contractor shall provide temporary water pollution control measures, including, but not limited to, dikes, basins, ditches, and applying straw, bonded fiber matrix and seed, which become necessary as a result of his operations. The Contractor shall coordinate water pollution prevention work with all other work done on the contract.

Before starting any work on the project, the Contractor shall submit, for acceptance by the Engineer, a program to prevent water pollution effectively during construction of the project. Such program shall show the schedule for the erosion control work included in the contract and for all water pollution prevention measures which the Contractor proposes to take in connection with construction of the project to minimize the effects of operations upon adjacent streams and other bodies of water.

The Engineer will notify the Contractor of the acceptance or rejection of any submitted or revised water pollution prevention program in not more than 5 working days.

If the measures being taken by the Contractor are inadequate to prevent water pollution effectively, the Engineer may direct the Contractor to revise his operations and his water pollution prevention program. Such directions will be in writing and will specify the items of work for which the Contractor's water pollution prevention measures are inadequate. No further work shall be performed on said items until the water pollution control measures are adequate and, if also required, a revised water pollution prevention program has been accepted.

Nothing in the terms of the contract nor in the provisions in this Section shall relieve the Contractor of the responsibility for compliance with Sections 5650 and 12015 of the Fish

and Game Code, or other applicable statutes relating to prevention or abatement of water pollution.

The Contractor shall also conform to the following provisions:

a. Oily or greasy substances originating from the Contractor's operations shall not be allowed to enter or be placed where they will later enter a water body.

b. Portland cement or fresh Portland cement concrete shall not be allowed to enter drainage facilities. Any cement or concrete spills shall be immediately removed.

Compliance with the requirements of this section shall in no way relieve the Contractor from his responsibility to comply with other provisions of the contract, in particular his responsibility for damage and for preservation of property.

Water pollution control work shall conform to the California Storm Water Quality Associations (CASQA) Best Management Practice handbook for Construction 2015 edition or most recent.

Copies of the Handbook and the Permit are also available for review at Caltrans District 11 Headquarters, 4050 Taylor Street, San Diego, California 92110.

The Contractor shall know and fully comply with the applicable provisions of the Handbook and Federal, State, and local regulations that govern the Contractor's operations and storm water discharges from the project.

The Contractor shall be responsible for the costs and for liabilities imposed by law as a result of the Contractor's failure to comply with the provisions set forth in this section Water Pollution Control", including but not limited to: compliance with the applicable provisions of the Handbook, and Federal, State, and local regulations. For the purposes of this paragraph, costs and liabilities include, but are not limited to, fines, penalties, and damages whether assessed against the State or the Contractor, including those levied under the Federal Clean Water Act and the State Porter Cologne Water Quality Act.

At reasonable times and upon presentation of credentials and other documents as may be required by law, the Contractor shall allow authorized agents of the California Regional Water Quality Control Board, State Water Resources Control Board, United States Environmental Protection Agency and the local storm water management agency to:

a) Enter upon the construction site and the Contractor's facilities pertinent to the work;
b) Have access to and copy records that must be kept as specified in the Permit;
c) Inspect the construction site and related soil stabilization practices and sediment control measures; and
d) Sample or monitor for the purpose of ensuring compliance with the Permit.

The Contractor shall notify the Engineer immediately upon request from the regulatory agencies to enter, inspect, sample, monitor or otherwise access the project site or the Contractor's records.

7-8.6.2 Best Management Practices (BMPs)

Add the following:

7-8.6.2.2 Gravel Bag Check Dam

Gravel bag check dam shall be installed where required and placed in accordance with the detail the CASQA BMP Handbook, latest edition. Gravel fabric shall be woven polypropylene, polyethylene or Polyamide with a minimum unit weight of 0.25 pound per square yard. The fabric shall have a mullen burst strength of at least 300 psi, conforming to ASTM Designation: D 3786 and an ultraviolet (UV) stability exceeding 70 percent. Gravel fill material shall be non-cohesive, coarse sand or gravel, free from deleterious material or fines. Gravel bag check dams shall be maintained to provide for adequate sediment holding capacity. Sediment deposits shall be removed when the deposit reaches one-third of the gravel bag barrier height and between rain events whichever is most frequent. Removed sediment shall be deposited within the project in such a way that it is not subject to erosion by wind or water. When no longer required for the intended purpose or as determined by the Engineer, gravel bag barriers shall be removed. Holes, depressions or any other ground disturbance caused by the gravel bag barriers shall be backfilled and repaired to the preexisting condition.

7-8.6.2.5 Materials, Equipment, and Waste Management

a) All portable toilets shall have a secondary containment and not be located near any storm drain, catch basin, watercourse, locations where it could be contacted by the Contractors operations, or locations on streets where it could be contacted by vehicular traffic.

b) Vehicle and equipment maintenance, repair and storage will require BMP's to be implemented including use of drip pans or equivalent under vehicles stored overnight, or coverage of equipment prior to a rain storm which has asphalt substances, such as paving machine, oil distributer trucks, tack coat trailers, etc. The Contractor shall perform daily inspection for leaks, and spills, and implement the prompt removal of spills. Oil-absorbent spill removal material must be available on site.

c) Trash dumpsters shall have lids, remain closed at all times, and not be overfilled. When not in use, trash dumpsters shall be locked to prevent illegal dumping, sifting through trash, and entry by wildlife. Additional trash pick up to accommodate accumulated trash shall be required when needed by the Contractor to prevent overflow of dumpsters.

d) Liquid materials shall be stored in closed containers with secondary containment and shall be covered. Solid materials shall be stored on pallets and be covered during rain events.

e) A material washout shall be provided onsite whenever liquid materials are used. The washout shall be sized to fully contain those materials and the surrounding area shall be kept free of spills at all times.

f) Discharge of potable water other than when utilized for dust control (such as power-washing or filling water trucks) shall be prevented.

7-8.6.2.6 Maintenance

To ensure the proper implementation and functioning of control measures, the Contractor shall regularly, but a least weekly, inspect and maintain the construction site for the control measures. The Contractor shall identify corrective actions and time needed to address any deficient measures or reinitiate any measures that have been discontinued.

If the Contractor or the Engineer identifies a deficiency in the deployment or functioning of an identified control measure, the deficiency shall be corrected immediately. The deficiency may be corrected at a later date and time if requested by the Contractor and approved by the Engineer in writing, but not later than the onset of subsequent precipitation. The correction of deficiencies shall be at no additional cost to the City.

7-8.6.6 Payment

Add the following subsection:

Payment for **"Water Pollution Control"** shall include all costs for the installation, maintenance, inspection, and removal of water pollution control items, including but not limited to; gravel bags, fiber rolls, silt fence, inlet filters and all other water pollution control items. This item shall include all costs associated with the handling of storm water during construction, including rain events and nuisance water. Unit price bid for **"Water Pollution Control"** shall be included in the unit price bid for **"Trash Enclosure Removal"** and **"Trash Enclosure"**.

7-8.7 Graffiti Control

The Contractor shall maintain the site improvements, including any temporary facilities, equipment or other materials free of graffiti. All graffiti shall be removed within 24 hours. Contractor shall notify the Sheriff's Department upon discovery or notification of graffiti and allow a reasonable time for Sheriff Department staff to document graffiti for future prosecution when possible.

7-8.8 Payment

Payment for Work Site Maintenance, excluding Water Pollution Control shall be included in the unit price bid for the major items of work unless a separate bid item is provided.

7-9 PROTECTION AND RESTORATION OF EXISTING IMPROVEMENTS

Add the following paragraphs:

The Contractor shall be responsible to protect all existing public and private facilities during the Work. Any damaged striping or reflective pavement markers from tracking or equipment shall be replaced. The Contractor shall replace all damaged improvements. Contractor shall repair/replace any and all damaged improvements at their expense.

7-9.1 Placement and Removal of Markouts

Markouts shall refer to all temporary marking or painting of the ground, pavement, or sidewalk by the facility or utility owner or its representative for the Contractors Convenience.

Markouts shall not be placed in the public right-of-way more than 30 days prior to the commencement of excavations. No paint or markings of any kind shall be placed on existing facilities or any other removable item within the right-of-way without approval from the Engineer. This includes but not limited to; manhole covers, valve lids, catch basins, grates, street light poles, signs, traffic signal poles, truncated domes and other similar items.

All markings for utility and underground markouts shall be placed with removable paint or marking chalk in order to allow for a complete removal of all markings at the end the project to provide a neat and clean appearance. All markings shall be removed by the end of the project to the satisfaction of the Engineer. The Contractor shall be responsible to notify the utility and underground agencies of this requirement when requesting markouts for the project area.

When permitted by the Engineer, the Contractor may “black-out” utility and underground markings on asphalt concrete pavement with marking paint which closely matches the existing asphalt pavements surface color in a flat sheen type of marking paint. All markouts on concrete shall be removed by pressure washing or other method as approved by the Engineer. Discharge water and residue shall not be allowed to enter drainage courses, inlets or catch basins.

The cost of the removal of markouts shall be included in the applicable bid items.

7-9.2 Video Recording of Existing Conditions

The Contractor shall document any existing site conditions which are within the limits of the project and adjacent to the project by video recording the project site in advance of the work. Contractor shall submit the DVD recording to the Engineer no later than 5 working days after the Notice to Proceed. The Contractor shall obtain written permission from private property owners prior to video recording on private property.

Examples of the items to be recorded are including but not limited to:

1. Existing conditions
2. Pavement conditions
3. Location and condition of existing pavement striping, markings and markers
4. Adjacent property conditions
5. Curbs, gutters, sidewalk and median conditions
6. Fencing and landscape conditions
7. Building facilities
8. Safety conditions
9. Unusual conditions or equipment

7-9.2.1 Payment

Payment for video recording services shall be included in the unit price bid for **"Mobilization"** when included in the bid schedule. If no such item is provided, payment shall be included in the major items of work.

7-9.3 Payment for Planned or Foreseeable Damages

The Contractor shall include payment for the restoration of existing improvements that may be damaged as a part of the Work in the items of Work which cause the damages to the existing improvements.

7-10 SAFETY

7-10.1 Responsibility

The Contractor is responsible to ensure a safe work site at all time during the Contract. Contractor shall inform occupants of abutting properties by written notice, of any access limitations made necessary by the Work at least 5 working days in advance.

The Contractor shall ensure compliance with all local, State and Federal safety requirements for all aspects of the work including but not limited to:

a) Providing adequate safeguards for workers and the general public.
b) Assuring that any person working in or adjacent to a traveled roadway wears a safety vest as required for workers and flag persons.
c) All employees wear suitable head, eye and foot protection at all times, including and hearing protection when required due to the work.
d) Patrol the construction site as required to ensure that all safety devices are in place and operating at all times.
e) Vehicles and equipment have operating backup alarms.

7-10.4 Safety

7-10.4.1 Work Site Safety

7-10.4.1.3 Health and Safety Plan

Add the following subsection:

The Contractor and their subcontractors have the ultimate responsibility for the health and safety of their respective employees. These specifications shall not be construed to limit the Contractor and their subcontractors liability nor to assume that the City, the City Council, its officers, employees, agents or designate, will assume any of the Contractor's or their subcontractor's liability associated with Site safety considerations.

The Contractor shall have a health and safety plan in effect at least 1 week prior to commencement of the Work. The plan must comply with all OSHA, and other State and Federal requirements. The plan must specifically address procedures and protocols that will be followed to monitor for the presence of hazardous atmosphere, possibility for engulfment, gasses due to organic soils or proximity to landfills, exposure to hazardous products that may be released from grinding, cutting, or torching galvanized or painted surfaces, contaminated soil, and groundwater, and identify response actions that will be

taken when these conditions are encountered. The City will not assume any role in determining the adequacy of the plan on the Contractor's behalf.

7-10.4.1.6 Emergencies
Add the following subsection:

In the event of an emergency affecting the safety or protection of persons or the Work or property at, or adjacent to the Site, the Contractor, without special instruction or authorization from the Engineer, is obligated to act to prevent threatened damage, injury or loss. The Contractor shall provide prompt written notice to the Engineer if the Contractor has determined that significant changes in the Work have resulted due to the action taken in response to an emergency.

7-17 NOTIFICATION AND COORDINATION
Add the following subsection:

7-17.1 Agency Coordination

The Contractor shall provide 5 working days advance notification to all affected agencies due to the work and/or and traffic control implementation. Affected agencies may include, but not limed to the following:

City Departments / County Agencies:

1. Santee City Hall: (619) 258-4100
2. San Diego County Sheriff, Santee Station: (619) 956-4000
3. San Diego County Sheriff, Communications: (858) 565-5200
4. Santee Fire Department Administration: (619) 258-4150
5. Santee Fire Station No. 4 (Cottonwood Ave): (619) 258-4151
6. Santee Fire Station No. 5 (Carlton Oaks Drive): (619) 258-4120

Others:
Provided for additional contacts designated for the Contract

1._____ (____)_____.
2._____ (____)_____.
3._____ (____)_____.
4._____ (____)_____.

SECTION 9 - MEASUREMENT AND PAYMENT

Is amended as follows:

9-1 MEASUREMENT OF QUANTITIES FOR UNIT PRICE WORK

9-1.2 Methods of Measurement
Add the following:

Measurement shall be in English units as shown on the bid schedule.

9-2 LUMP SUM WORK

9-2.1 Schedule of Values (SOV)

Add the following subsection:

Contractor shall submit a schedule of values for the lump bid items of the Work to the Engineer for review and approval prior to the start of work. The schedule of values shall:

1. Subdivide the Work into its respective parts
2. Include values for all items comprising the work
3. Break down the Work not specifically included in the Bid as necessary for establishment of cost and schedule activity
4. Serve as the basis for monthly progress payments

The Engineer shall be the sole judge of the acceptable numbers, details, and description of values established. If, in the opinion of the Engineer, a greater number of items than those proposed by the Contractor are necessary, the Contractor shall add the additional items so identified by the Engineer. When requested by the Engineer, the Contractor shall provide substantiating data in support of the SOV.

In the event the Contractor and the Engineer agree to make adjustments to the original SOV because of inequities discovered in the original accepted SOV, increases and equal decreases to values for activities shall be made.

9-2.2 Payment

Payment for the preparation of the schedule of values shall be included in the unit price bid for **"Mobilization"**.

9-3 PAYMENT

9-3.1 General

Add the following paragraph:

Payment will not be made for any item that is not specifically set forth in the Bid Schedule, and all costs therefor shall be included in the prices named in the Bid Schedule for the various appurtenant items of work.

Partial payment will not be made for any incomplete item of work unless the item of work is a lump sum bid item in the proposal with a value in excess of $10,000.00. Items of work that are measured as square footage, linear footage, cubic yards, etc. may be billed as portions of the work are completed in accordance with the requirements of the bid item description.

At the expiration of 35 calendar days from the date of filing the Notice of Completion and upon receipt by the Engineer of a fully executed Release of Claims. The total amount deducted from the final estimate, and retained by the City will be paid to the Contractor except such amounts as are required by law to be withheld by properly executed and filed notices to stop payment.

9-3.2 Partial and Final Payment

Add the following:

Delete first three paragraphs and substitute following:

1. The Contractor shall submit, to the Engineer, a written progress estimate of the work completed in accordance to Section 9-3.2.1 “Application for Progress Payment”. From each progress estimate, five percent (5%) will be deducted and retained by the City, until at the expiration of 35 days after the acceptance of the Work by the City Council, or as prescribed by law, the amount deducted from the final estimate and retained by the City will be processed for payment to the Contractor, except for such amounts as are required by law to be withheld by properly executed and filed notices to stop payment, or as may be authorized by the Contract to be further retained.

   If in the opinion of the Engineer the Work progress is not acceptable, the City may deduct and retain 10% from each progress payment. After 50% of the Work has been completed and if progress on the Work is satisfactory, the total retention held may be limited to 10% of the first half of the total contract price.

   Acceptance of any progress payment accompanying any estimate without written protest shall be an acknowledgement by the Contractor that the number of accumulated contract days shown on the associated statement of working days is correct. Progress payments made by the City to the Contractor after the completion date of the Contract shall not constitute a waiver of liquidated damages.

   Partial payments made after the Contract completion date will reflect the amount withheld for liquidated damages as require by Section 6-9, “Liquidated Damages.” Any such partial payments made to the Contractor, or its securities, will not constitute a waiver of the City’s liquidated damages.

2. The final payment of five percent (5%) of the value of work done under this Contract retained by the City, if unencumbered, shall be made within sixty (60) calendar days after the date of completion of the work, provided however, that in the event of a dispute between the City and the Contractor, the City may withhold from the final payment an amount not to exceed one hundred and fifty percent (150%) of the disputed amount. Completion means any of the following as provided by Public Contract Code section 7107:

   a. The occupation, beneficial use, and enjoyment of a work of improvement, excluding any operation only for testing, startup, or commissioning, by the public agency, or its agent, accompanied by cessation of labor on the work of improvement.
   b. The acceptance by the public agency, or its agent, or the work of improvement.
   c. After the commencement of a work of improvement, a cessation of labor on the work of improvement for a continuous period of 100 calendar days or more, due to factors beyond the control of the Contractor.
   d. After the commencement of a work of improvement, a cessation of labor on the work of improvement for a continuous period of 30 calendar days or more,

if the public agency files for record a notice of cessation or a notice of completion.

3. This Contract is subject to the provisions of Public Contract Code section 7107.

   a. For purposes of this Contract, the acceptance by the City means acceptance made only by an action of the governing body of the City in session. Acceptance by Contractor of said final payment shall constitute a waiver of all claims against the City arising from this Contract.

4. The City shall, after the satisfactory completion of the work, make a final estimate of the amount of Work done thereunder and the value of said work, and the City shall pay the entire sum so found to be due after deduction therefrom all previous payments and all amounts to be retained under the provisions of the Contract Documents, provided that a release of liens and claims has been received from the Contractor pursuant to Civil Code Section 3262. All prior partial estimates and payments shall be subject to correction in the final estimate and payment. The final payment shall not be due and payable until the expiration of thirty-five (35) calendar days from the date of acceptance of the work by the City, which acceptance shall be by formal action of the City Council.

   a. No certificate given or payments made under the Contract, except the final certificate or final payment shall be evidence of the performance of the Contract, either wholly or in part, and no payment shall be construed to be an acceptance of any defective work or improper materials.

5. Neither Final Payment nor any final release of retention will become due until the Contractor submits to the Engineer:

   a. An affidavit that payrolls, bills for materials and equipment, and other indebtedness connected with the Work for which the City or the City's property might be responsible or encumbered, less amounts withheld by the City, have been paid or otherwise satisfied;

   b. A certificate evidencing that insurance required by the Contract Documents to remain in force after Final Payment is currently in effect and will not be canceled or allowed to expire until at least 30-day prior written notice has been given to the Engineer;

   c. Consent of Surety to Final Payment; and

   d. If required by the Engineer, other data establishing payment or satisfaction of obligations, such as receipts, releases and waiver of liens, claims, security interests or encumbrances arising out of the Contract Documents. If a Subcontractor refused to furnish a release or waiver required by the City, the Contractor may furnish a bond satisfactory to the City to indemnify the City against such lien; and

e. The Contractor has completed the Work, and provided the required record drawings, operation manuals, test reports, warranty documentation, and all other required documents as determined by the City.

9-3.2.1 Application for Progress Payment
Add the following subsection:

By the 10th day of each month, the Contractor shall prepare and submit to the Engineer a partial payment estimate that identifies acceptable Work performed during the previous month, or since the last partial payment estimate was submitted. If requested by the Engineer, the Contractor shall provide such additional data as may be required to support the payment estimate. Such data may include satisfactory evidence of payment for equipment, materials, labor including payments to subcontractors and suppliers.

The Contractor shall use the format required by the City for the application for progress payment. An electronic copy of the invoice form is available from the Engineer upon request.

Any payment request that is disputed or determined to be improper will be returned to the Contractor no later than 7 calendar days from receipt accompanied by documentation by the Engineer describing the reason(s) which the payment request is not proper.

The City will not pay progress or partial payments until the Contractor has submitted to the Engineer an updated schedule. It is the Contractor's sole responsibility to prepare and submit the schedule update**.**

9-3.2.2 Amount of Progress Payment
Add the following subsection:

Once an undisputed and properly submitted application for payment is received from the Contractor, payment shall be made within thirty (30) days of receipt of the undisputed and properly submitted application for payment and approval of the estimate. The City will pay the Contractor for Work performed, including payment for any stored materials, through the period covered by the application for payment, less retention as set forth in the Contract Documents.

9-3.2.3 Withholding of Payment
Add the following subsection:

The Engineer may withhold payment on account of an application for payment to the extent necessary to protect the City from loss or additional unwanted expenses due to the following:

a) Defective or incomplete Work not remedied;

b) A deductive change order;

c) Third party claims filed or reasonable evidence indicating probable filing of claims;

d) Damage to the City or a Separate Contractor caused by the Contractor or neglect to the extent not covered by insurance;

e) Reasonable evidence that the Work will not be completed within the Contract Time due to inexcusable delay, and that the unpaid balance of the Contract Price would not be adequate to cover Liquidated Damages for the anticipated or actual unexcused delay;

f) The persistent failure by the Contractor to perform Work in accordance with the Contract Documents, including failure to maintain the progress of the Work in accordance with the schedule. Persistent failure to maintain the progress of the Work means that for a period of 2 consecutive months following a written notice from the Engineer, you fail to correct a behind-schedule condition at a rate that would reasonably indicate that you will finish the Project on schedule;

g) Disregard of authority of the Engineer or the laws of any public body having jurisdiction;

h) Stop notices, wage orders, or the withholding required by Applicable Law;

When all the above reasons for withholding payment are removed, payment will be made for amounts previously withheld on the next progress payment or final payment. Prior to any withholding pursuant to this section, the Engineer may meet with the Contractor to discuss potential withholding, and attempt in good faith to resolve such issues without the need for withholding.

9-3.2.3 Waiver of Claims at Final Payment
Add the following subsection

The Contractor's acceptance of Final Payment constitutes a waiver of affirmative Claims by the Contractor, except those previously made in writing and identified as unsettled at the time of Final Payment, which are expressly reserved by the Contractor from operation of its Release of Claims pursuant to Public Contract Code Section 7100 or Applicable Law.

9-3.3 Delivered Materials

9-3.3.1 Payment for Stored Materials
Add the following subsection:

The Contractor may request payment for materials and equipment which will be incorporated into the Work and are delivered to the Project or stored in or near the Site which meet the following requirements:

a) The material or equipment meets the Contact requirements and all required test results and certifications have been provided to the Engineer.

b) The materials are only non-perishable items and shall not include landscape planting materials.

c) Material cost must be evidenced by the manufacturer's paid invoice bearing the statement that the Contractor has paid all previous invoices.

d) The payment for stored materials on hand shall not exceed the invoice price or 60% of the bid prices for the pay items into which the materials are to be incorporated, whichever is less unless otherwise approved by the Engineer.

e) The Contractor shall provide the Engineer, upon request and prior to any partial payment, documentation which transfers absolute legal title to such materials to the City conditional only upon receipt of Final Payment. Neither such transfer of title nor any partial payment shall constitute acceptance by the City of the materials, nor void the right to reject materials subsequently found to be unsatisfactory in accordance with 4-1, "Materials and Workmanship" or in any way relieve the Contractor of any obligation arising under the Contract Documents.

f) The payments for stored materials are subject to retention as set forth in Section 9-3.2, "Partial and Final Payment".

g) The Contractor shall assume all risks associated with the loss or damage to the stored products for which payment has been received or not.

h) Equipment and material shall be stored in accordance with the manufacturer's recommendations. The stored products shall be in a form ready for installation. The City will not pay for raw materials or parts and pieces of equipment.

i) Any and all surplus materials that are not incorporated into the Work will become the Contractor's property of no additional cost to the City and shall be removed from the site at the Contractor's expense with no additional cost to the City.

j) Payment for materials on hand shall not be included when determining the percentage of Work Completed.

9-3.3.2 Payment for Stored Materials Off-Site

a) The City reserves the right to refuse approval for payment for any equipment and materials suitably stored off-site in its sole discretion, regardless of whether all conditions set herein have been met.

b) Payment for materials and equipment delivered and stored off-site shall be contingent upon the Contractors compliance with the storage and protective maintenance requirements set forth in the Contract Documents and all other requirements necessary to preserve equipment warranties from the benefit of the City.

c) The costs associated with the delivery to and storage at an off-site facility shall be borne by the Contractor regardless of the Engineer's approval to deliver and store the materials.

d) Material and equipment shall be clearly marked and identified as being specifically fabricated, produced and reserved for use on the Project.

9-3.4 Mobilization

Add the following:

Mobilization consists of all work necessary for the movement of personnel, equipment, supplies and incidentals to and from the Site for establishment of all offices, buildings, storage yards, and other facilities necessary for the Work, and for all other work and operations which will be performed prior to the beginning of work, those works items not directly attributed to any specific bid item, and those work items after completion of the Work on the various contract items on site.

The Contractor shall properly design the Project parameters to incorporate construction mobility for moving on and off the Site in a manner that limits disturbance to the surrounding residences, businesses and any other persons. This includes the designated staging areas, loading areas, and assemblage areas.

The complete dismantling and removal of the Contractors properties, temporary facilities, equipment, materials, construction waste and personnel at the Site, sometimes referred to as demobilization, shall be included in the payment for **"Mobilization"**.

9-3.4.1 Payment

Add the following subsection:

Payment for **"Mobilization"** shall be measured and paid for on a lump sum basis and shall include full compensation for furnishing all labor, materials, equipment, tools, and incidentals necessary to complete the work. Payment shall include but not limited to; contract bonds, insurance, temporary utility services, preparation of construction schedules, moving and removing of equipment, preparation of submittals, preparation of warranties and demobilization.

If the bid item for mobilization exceeds 5% of the total Contract amount, any such amount above the 5% of the total Contract amount, will be paid as part of the final payment. If a separate bid item for mobilization is not provided in the bid schedule, the payment for mobilization shall be included in the various bid items.

9-3.5 Field Directed Changes

Add the following subsection:

Payment for **"Field Directed Changes"** shall be paid for on a lump sum basis for each field order issued to the Contractor. This mandatory bid amount included in the bid proposal shall be for additional work at agreed upon unit prices when no such bid item is provided for the additional work. This bid item shall be used at the sole discretion of the Engineer for field directed changes. Contractor is not entitled to any amount of the bid item unless a formal Field Directed Change or Change Order has been issued to the Contractor in writing. Any remaining amount of this bid item which has not been issued to the Contractor shall be deducted from the contract.

9-3.6 Proposal Pay Items

Add the following subsection:

Only items in the Proposal are Pay Items. Other specification items will be complied with; however, their measurement and payment provisions are hereby deleted.

The price bid shall cover all work required by the contract documents. All costs in connection with the proper and successful completion of work, including furnishing all materials, equipment, supplies, and appurtenances; providing all construction plant openings, tools, all taxes and performing all necessary labor and supervision to fully complete the work, shall be included in the unit and lump sum prices bid. All work not specifically set forth as a pay item in the Proposal shall be considered a subsidiary obligation of the Contractor and all costs in connection therewith shall be included in the prices bid.

Work that is subsidiary to Proposal Pay Items includes, but not limited to, removal of waste material from the site, all disposal fees, replacement of damaged private property, damaged pavement markings, markers and/or striping outside of work limits, damaged landscaping and irrigation systems, clean up and all other work required to complete the project and restore the areas of construction to their preconstruction condition.

9-4 WAIVER OF CLAIMS

Add the following subsection:

The Contractors acceptance of the Final Payment of undisputed Contract amounts released the City, the Engineer, and any Consultants acting as the City's agent, from all claims and all liability to the Contractor fall all things done or furnished in connection with the Work, and every act of the City and others relating to or arising out of the Work and related to those undisputed amounts. No payment, however, final or otherwise, will release the Contractor and the Surety from obligations under the Contract and the Performance Bond, Payment Bond and any other bonds and warranties as herein provided.

PART 2 CONSTRUCTION MATERIALS

Is amended as follows:

SECTION 203 - BITUMINOUS MATERIALS

203-1 PAVING ASPHALT

203-1.6 Measurement and Payment

Paving asphalt shall be included in the unit price bid for the major items or work requiring the usage of paving asphalt including but not limited to; asphalt concrete mixtures.

203-6 ASPHALT CONCRETE

203-6.4 Asphalt Concrete Mixtures

203-6.4.1 Class and Grade
Add the following:

A minimum of five (5) working days prior to the paving operation, the Contractor shall submit to the Engineer the pavement supplier's certification of gradation and oil content for the asphalt concrete to be used for this Contract. Asphalt concrete shall conform to the following aggregate gradation and performance grade of paving asphalt. Maximum amount of reclaimed asphalt pavement (RAP) permissible for all asphalt concrete mixtures shall be 20 percent.

Asphalt Patching	C2	(PG 64-10)

SECTION 204 - LUMBER AND TREATMENT WITH PRESERVATIVES

204-1 Lumber and Plywood
Is amended as follows:

204-1.1 Kinds

204-1.1.2 Douglas Fir
Add the following:

Lumber for wood beams and rafters shall No. 2 and better, kiln dried Douglas fir.

204-1.3.2 Plywood
Add the following:

Plywood used for sheathing shall be B-grade or B-C grade plywood and shall be have an exterior rating. If B-C plywood is used, the B side shall be exposed.

SECTION 206 - MISCELLANEOUS METAL ITEMS

206-7 JOIST HANGERS AND METAL

Add the following subsection:

206-7.1 General

Joist hangers shall be Simpson Strong-Tie, galvanized, Model LUCZ concealed, face mount joist hangers or approved equal. Joist hangers shall be used at every joist connection to the front or rear beam.

Metal angle shall be as shown on the details and hot rolled.

Cut edges of metal shall be ground with no sharp edges exposed.

206-8 SCREWS AND NAILS

Add the following subsection:

Screws to connect 3/4" x 3/4" metal angle to wood shall be galvanized 1/4" X 2" lag screws.

Screws to connect 3/4" x 3/4" metal angle to masonry shall be 1/4" x 2 1/4" hex head masonry screws.

Galvanized washers shall be used at all locations where screws are used to connect the metal angle to wood or to masonry.

Nails to connect joist hangers to beams shall be Simpson Strong-Tie Smooth Shank Connector Nails, 10d x 1 1/2" or approved equal.

Roofing nails shall be electro-galvanized steel with plastic cap.

206-9 WOVEN WIRE MESH

Add the following subsection:

Woven wire mesh shall be square, carbon steel, cold rolled, mill finish, woven-plain weave, 4x4 mesh and 16 gauge. Openings shall be 5mm (0.1870") max. square.

Woven wire mesh shall be placed inside of the metal angle as shown on the details and in the Specifications. Woven wire mesh shall be tack welded every 6 inches along each edge to the metal angle.

206-10 STANDING SEAM METAL ROOFING

Add the following subsection:

206-10.1 General

Standing seam metal roof panels shall be a between 15"-18" wide, flat pan (without ribs), 1.50" to 1.75" standing seam height, smooth, flat pan, 26 gauge Kynar 500 painted steel, galvanized, Dutch Seam by ATAS International, Inc., Versa-Span by Taylor Metal Products or approved equal. Color shall be gray. Contractor shall submit color sample for City approval prior to order or fabrication of roof. Installation shall be

per manufacturer's recommendations and details. All fasteners used on the standing seam roof shall be concealed.

All steel roofing components shall be pre-finished with PVDF (Polyvinylidene Fluoride) on the top exterior facing side. Roof panels shall be pre-cut with standing seams running down with the slope of the roof.

206-10.2 Warranty

The manufacturer of the standing seam metal roofing shall supply the City with the following warranties upon completion of the project:

30-year Kynar 500 paint finish warranty.
20-year warranty against defects in material.
20-year weathertight warranty.

SECTION 210 - PAINT AND PROTECTIVE COATINGS

210-1 Paint

210-1.1 General Requirements

The Contractor shall have the paint color matched by taking an existing paint chip sample on the Project to the paint supplier in order to accurately match the new paint to the existing color. The mixed paint shall be painted on a sample piece of material and the mixed paint color shall be approved by the City prior to the application of all paint.

All remaining primer and paint, upon completion of the project, shall be provided to the City.

All lumber and metal material shall be painted. All lumber and metal shall be clean, dry and free of any dust, dirt or mildew before applying primer and painting. Unit price bid for **"Trash Enclosure"** shall also include the costs to paint all existing metal.

The Contractor shall place "Wet Paint" signs and caution tape in sufficient quantity and in areas of paint that is wet to prevent damage and access by the public. Contractor is required to protect all painted surfaces until sufficiently dry and repaint any surfaces that have been damaged while drying.

The Contractor shall take appropriate precautions to protect existing concrete and other surfaces from excess paint during spraying or rolling of paint during the painting process. Any excess paint shall be cleaned up immediately.

All painting shall be completed by spraying, brush or rolling. If spraying is used, Contractor shall protect existing improvements and the surrounding area to prevent overspray.

210-1.3 Paint Coats

All material shall be painted with one coat of exterior rated primer as manufactured by Sherwin-Williams ProBlock Exterior Latex Primer, or approved equal. All exposed sides shall be painted, including ends.

All wood shall be painted with two (2) coats of exterior paint as manufactured by Sherwin-Williams DuraCraft Exterior Latex Flat, or approved equal. All exposed sides shall be painted, including ends.

210-1.3 Paint Coats

Delete the first sentence and replace with the following:

Paint used for wood and metal (except standing seam metal roof) shall be applied with 1 coat of primer and 2 finish coats of paint.

210-1.4 Paint Materials

Add the following:

Contractor shall obtain a paint sample from the existing gray color used throughout City Hall and have the paint matched to be used for the project. Paint shall be exterior rated and shall be flat sheen.

Primer and paint shall be exterior rated and recommended to be used on the material to be primed and painted.

All existing metal (gates, brackets, chain and hardware), lumber, exposed plywood, metal, screws and washers are to be painted grey in accordance with this Section. Stainless steel mesh shall not be painted.

Contractor shall submit the remaining paint to the City upon completion of the project.

PART 3 CONSTRUCTION METHODS

Is amended as follows:

SECTION 300 - EARTHWORK

Is amended as follows:

300-1 CLEARING AND GRUBBING

300-1.1 General

Add the following:

It is the intent of this specification to provide for the complete removal and disposal of all obstructions and objectionable materials not specifically provided for elsewhere in the plans and specifications in order to complete all work as shown on the plans

300-1.3 Removal and Disposal of Materials

Add the following paragraph:

No surplus material shall be disposed of within the right-of-way or on-site. The Contractor shall make arrangements to dispose of all surplus material off site and shall make every attempt to recycle the material and avoid dumping the material in a landfill. Upon request of the City, the Contractor shall show written documentation of the material disposal quantity and location.

300-1.3.2 Requirements

a) Bituminous Pavement

Revise the second sentence of the first paragraph as follows:

Removal of bituminous pavement shall be along saw cut lines.

d) Demolition of Trash Enclosures

Add the following:

Trash enclosures that are shown to the removed shall have all lumber, rock surfacing, concrete masonry block and concrete slabs completely removed and disposed of properly.

As part of the demolition of the trash enclosure, Contractor shall install a G-1 (6”) curb to complete the curb cut area in front of the trash enclosure to be removed. Approximately 13’ of curb shall be placed at the Building 3 location and 9’ of curb shall be placed at the Building 5 location. The existing asphalt shall be sawcut 18” from the location of the face of curb. The asphalt used in this area shall be 3” thick and Type C2 asphalt mix.

The Contractor shall place mulch, as provided by the City, in the areas of the trash enclosure removals. The Contractor shall pick up the mulch at the City Operation Yard, 9534 Via Zapador, Santee, CA 92071.

300-1.4 Payment

Unit price bid for **"Trash Enclosure Removal"** shall be paid on a lump sum basis as noted in the Bid Schedule. Unit price bid shall include full compensation for furnishing all labor, materials, tools, equipment for the demolition and removal of trash enclosures as described in this Section. Unit price shall also include all costs associated with the installation of a concrete curb (quantities as indicated in this Section), hauling and placement of mulch, traffic control as descried in this Section and on the Plans.

SECTION 302 - ROADWAY SURFACING

302-5 ASPHALT CONCRETE PAVEMENT

302-5.5 Distribution and Spreading

Is amended as follows:

When atmospheric temperatures are below 70 degrees F, all truck loads shall be covered with tarpaulins. Loads shall be covered when loaded at the asphalt plant and until the asphalt concrete is placed.

SECTION 303 - CONCRETE AND MASONRY CONSTRUCTION

303-5 CONCRETE CURBS, WALKS, GUTTERS, CROSS GUTTERS, ALLEY INTERSECTIONS, ACCESS RAMPS AND DRIVEWAYS

303-5.1 Requirements

303-5.1.1 General

Add the following:

All concrete curb work shall include saw cutting and removal of the existing asphalt pavement 18-inches wide and 3 inches thick. Asphalt within the 18-inch slot patch shall be compacted with a compaction rammer "Wacker". Asphalt concrete shall be Type C2.

The Contractor shall not imprint or stamp their company name on any concrete work. Any sections of concrete that have been imprinted or stamped by the Contractor is subject to removal and replacement. Any costs associated with this shall be the responsibility of the Contractor.

a) <u>Curbs</u>

Concrete for curbs shall be 560-C-3250.

The Contractor shall repair and/or replace existing landscaping, irrigation or other improvements adjacent to sections of replaced concrete.

All costs associated with the above requirements shall be included in applicable bid items.

303-5.2 Forms

303-5.2.1 Standard Forms

Concrete work performed without the use of forms shall be rejected. “Neat Pouring” or placement of concrete against an existing surface such as asphalt concrete is not permitted.

SECTION 304 – METAL FABRICATION AND CONSTRUCTION

304-1 STRUCTURAL STEEL

304-1.9 Welding

Add the following:

All exposed plug and square welds shall be ground flush. Excess slag from all exposed welds shall be removed.

All welding shall be completed by a certified welder (CW) as certified by the American Welding Society (AWS). Contractor shall submit copies of current AWS certification prior to any welding.

SECTION 305 - PILE DRIVING AND TIMBER CONSTRUCTION

305-2 TIMBER STRUCTURES AND TIMBER CONSTRUCTION

305-2.6 Measurement and Payment

Add the following:

Unit price bid for **“Trash Enclosure”** shall be paid on a lump sum basis as noted in the Bid Schedule at each location. Unit price bid shall include full compensation for furnishing all labor, materials, tools, equipment for the removal of existing wood roof, disposal costs, construction of trash enclosure, lumber, plywood sheathing, felt, woven wire mesh, paint, nails, screws, welding, cutting and modification of metal posts, standing seam metal roof panels, fasteners, joist hangers, flashing, sealant and traffic control to complete the trash enclosures as shown on the Plans and manufacturer’s details.

PART 6 - TEMPORARY TRAFFIC CONTROL

Is amended as follows:

SECTION 600 - ACCESS

600-1 GENERAL

600-2 VEHICULAR ACCESS

Add the following subsections:

600-2.1 General

During any and all aspects related to the work, the Contractor shall place no parking signs as needed in order to prosecute the work required.

600-2.2 Payment

Payment shall be included in applicable bid items.

SECTION 601 - WORK AREA TRAFFIC CONTROL

601-1 GENERAL

Add the following subsections:

601-1.1 Encroachment Permit

No work is permitted without an approved Encroachment Permit. The City will not charge for the cost of the encroachment permit.

601-1.2 Traffic Control Work Hours

Work that occurs within the City Hall Complex shall be performed Monday through Friday, 7:30 a.m. to 5:00 p.m.

Work related to the trash enclosure near Building 1 shall begin on the day after a City Council meeting. City Council meetings are on the 2nd and 4th Wednesdays of every month.

601-3 MEASUREMENT AND PAYMENT

Delete this section and replace with the following:

Payment shall be included in applicable bid items.

601-4 TRAFFIC CONTROL DEVICES

Delete and replace with the following:

601-4.1 General

All traffic control devices shall conform to the California MUTCD. The Contractor shall furnish, install, and maintain the traffic control devices to ensure the safe movement of

vehicles, pedestrians and to provide a safe work area for construction workers. The name of the owner of the traffic control devices shall be clearly noted on each device.

601-4.3 Cones

Cones shall be a minimum of 28 inches in height and shall be retroreflectorized per CA MUTCD standards.

601-5.3 Temporary No Parking

The Contractor shall place “No Parking–Tow Away Zone” signs in parking stalls 48 hours in advance of its impending work that will be affected parking stalls during the project to allow for demolition or construction of the trash enclosures. Signs shall be furnished by the Contractor and shall contain the day, date **AND** time of which no parking is in effect. The day **AND** date shall be the actual days of work. The Contractor shall remove these signs immediately when they are no longer needed. If the work is delayed or rescheduled, the Contractor shall either remove the signs or re-date the signs if the work will occur within the following five (5) days. If work is delayed for more than five (5) days after the signs were placed, the signs shall be removed and placed back up 48 hours in advance of the revised construction date. This cost shall be included in applicable bid items.

All signs shall be legible, clear and free of other information that may cause confusion as to the time and days of work. Lettering for the days of work shall be a minimum of 3” in height. All signs shall be in good condition and legible by pedestrians and vehicular traffic. Any sign deemed by the City in poor condition shall be removed and replaced by the Contractor.

CONTRACT EHIBITS

Exhibit A	Site Map
Exhibit B	Building 8 Trash Enclosure
Exhibit C	Building 1 Trash Enclosure
Exhibit D	Details

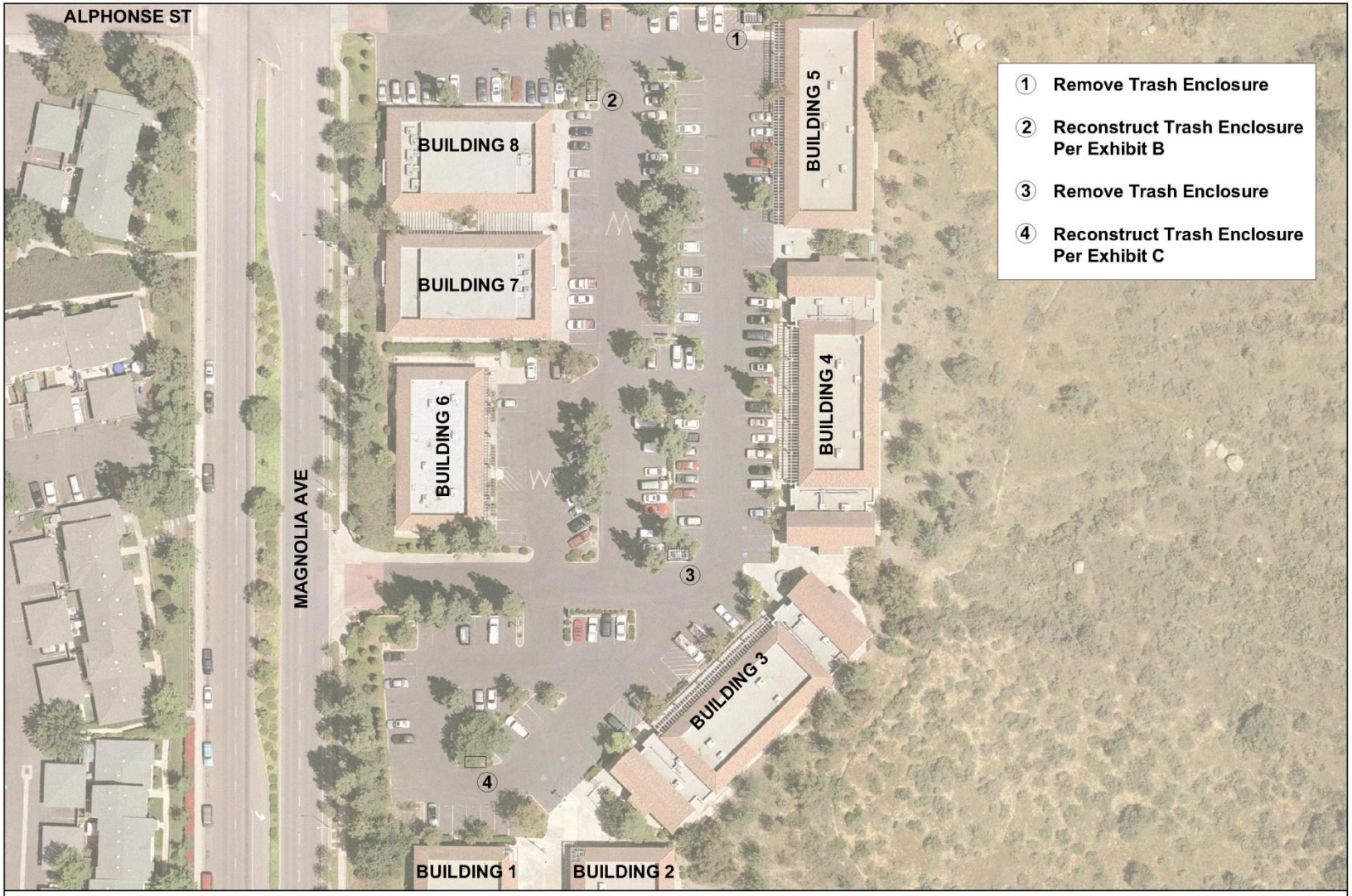

City Hall Trash Enclosure Modifications
CIP (2018-52)

EXHIBIT A
SITE MAP

Sheet 1 of 1

Trash Enclosure Location

NOT TO SCALE

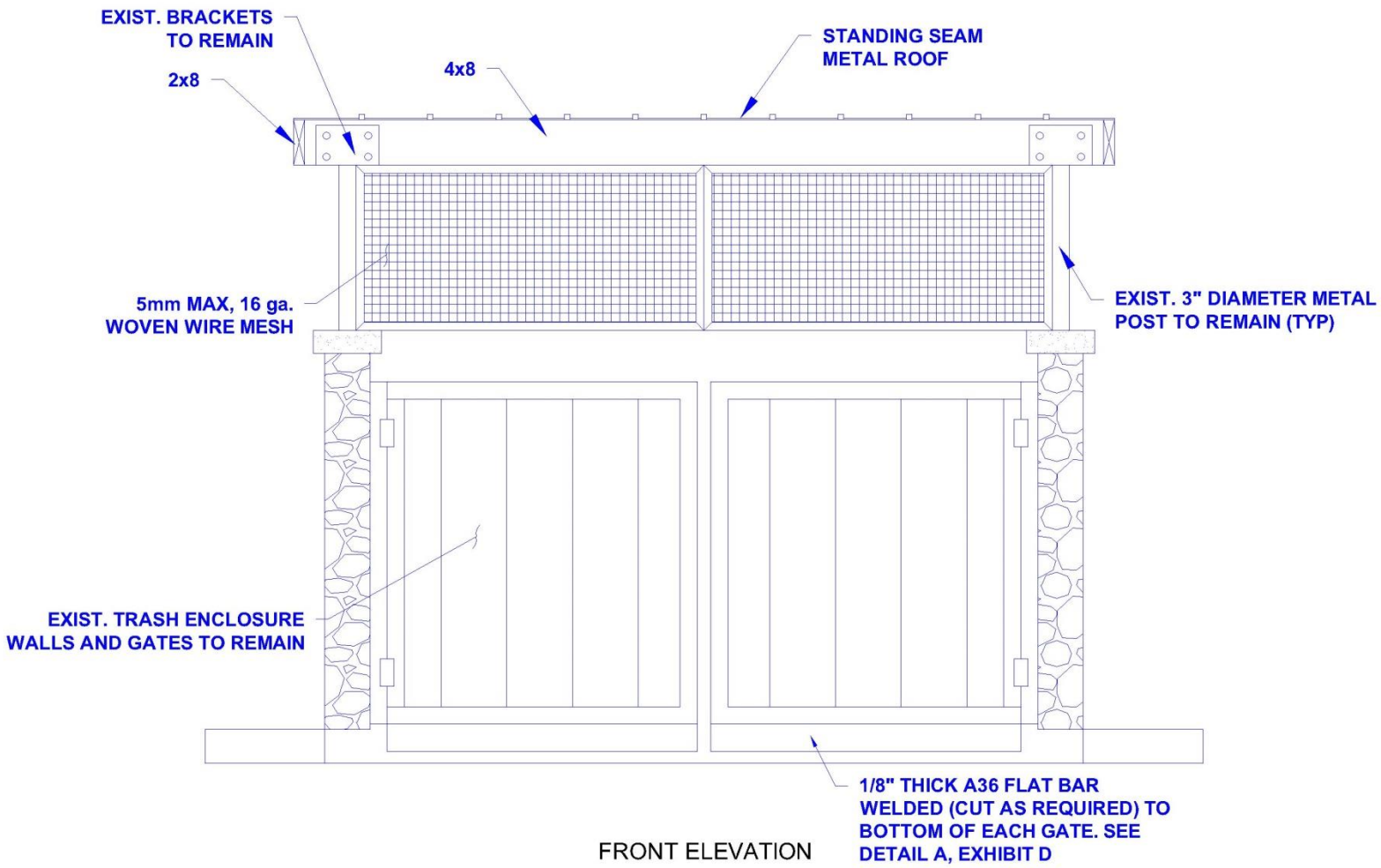

FRONT ELEVATION

EXHIBIT B
BUILDING 8 TRASH ENCLOSURE

City Hall Trash Enclosure
Modifications
CIP (2018-52)

Sheet 1 of 4

NOT TO SCALE

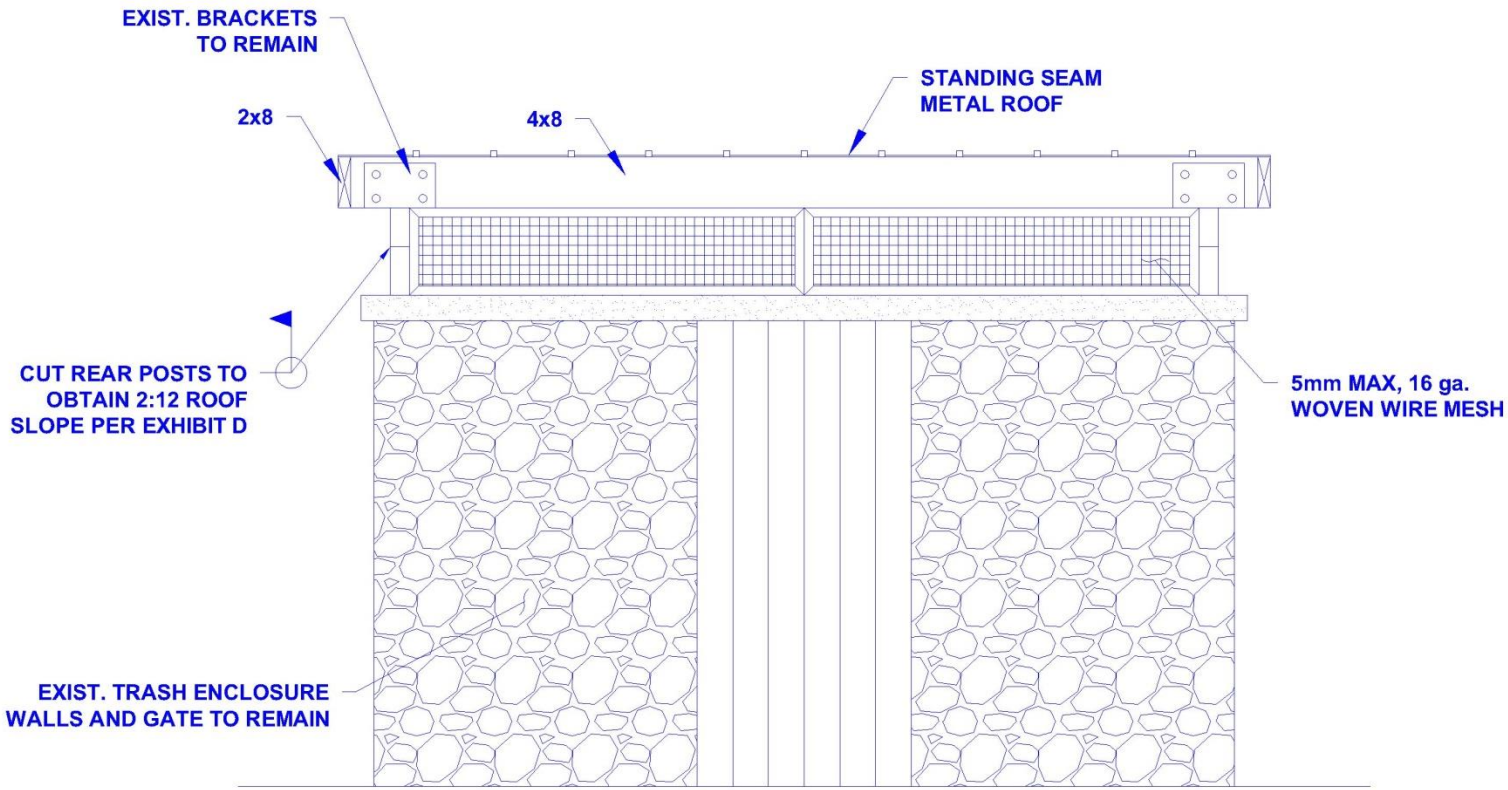

REAR ELEVATION

City Hall Trash Enclosure
Modifications
CIP (2018-52)

EXHIBIT B
BUILDING 8 TRASH ENCLOSURE

Sheet 2 of 4

NOT TO SCALE

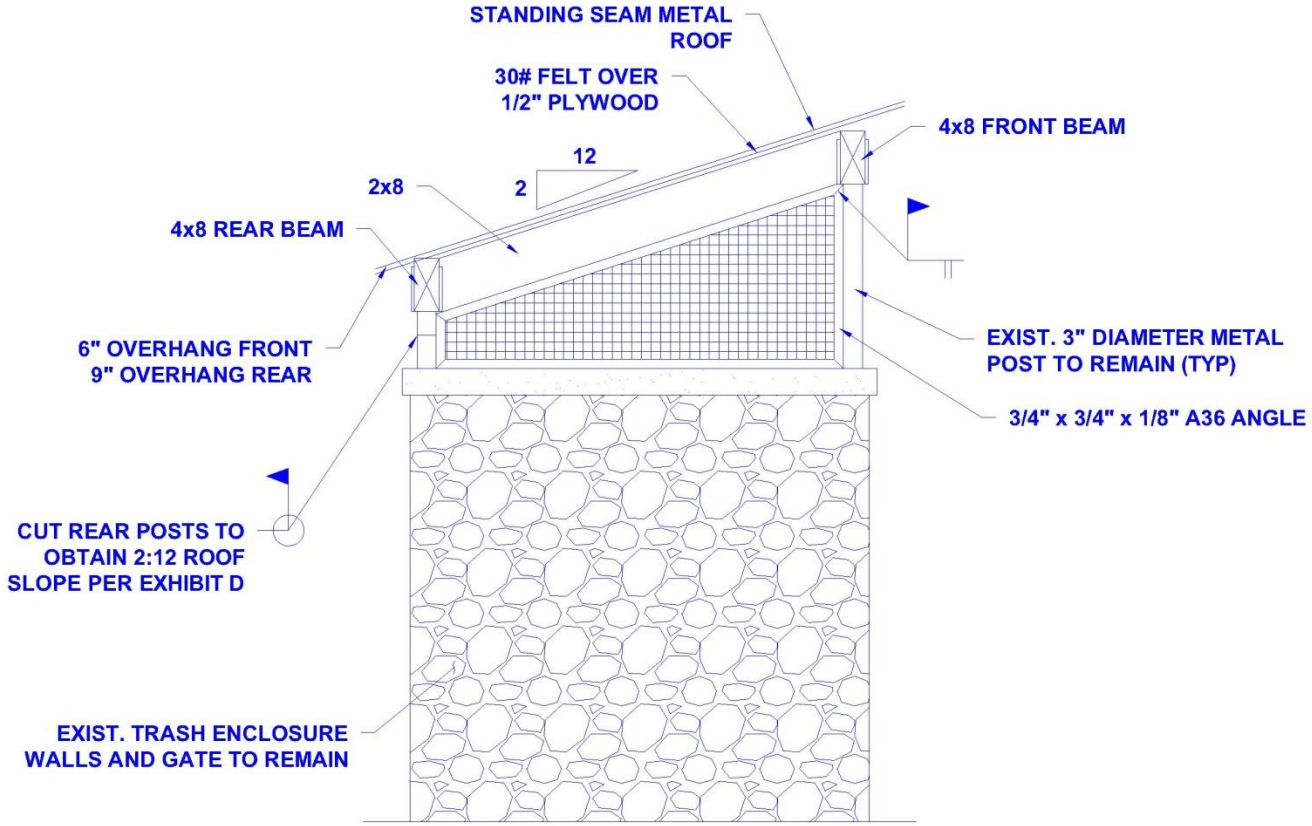

SIDE ELEVATION

City Hall Trash Enclosure
Modifications
CIP (2018-52)

EXHIBIT B
BUILDING 8 TRASH ENCLOSURE

Sheet 3 of 4

NOT TO SCALE

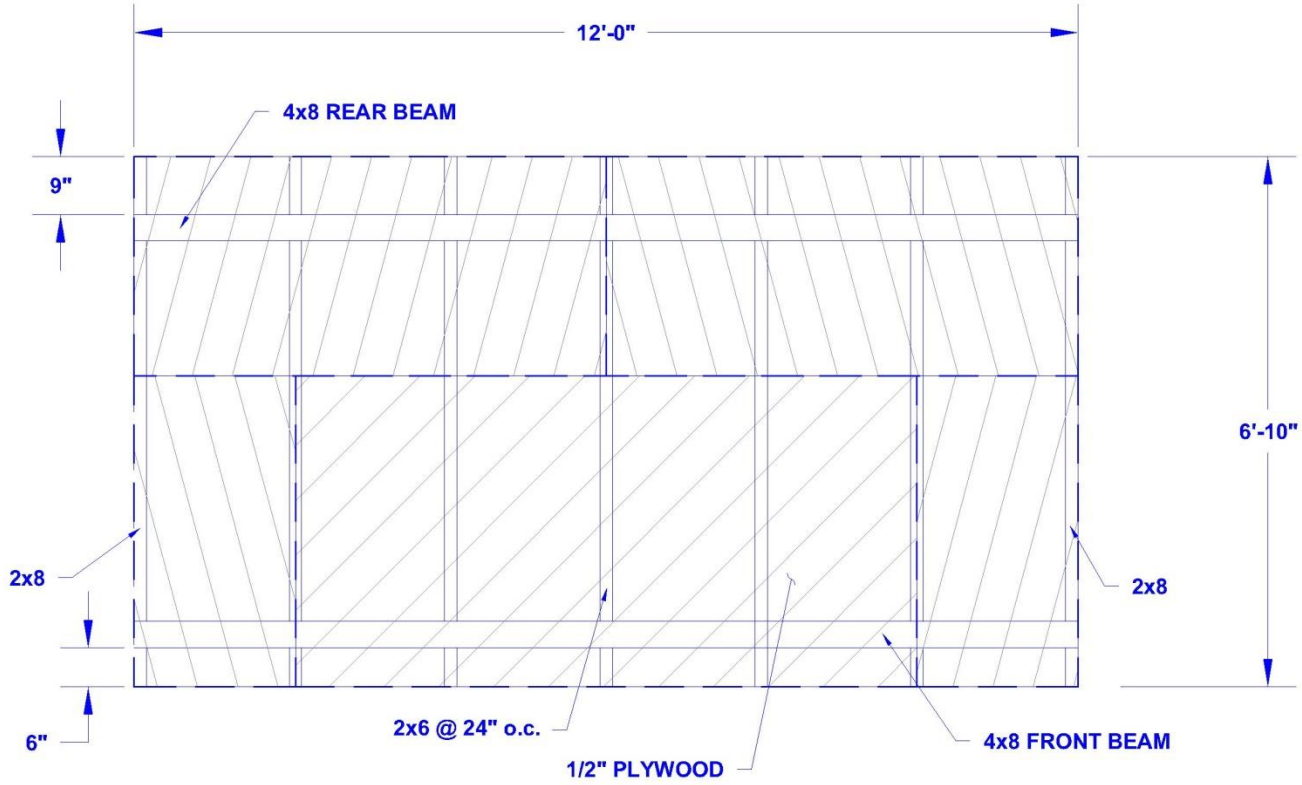

ROOF PLAN

City Hall Trash Enclosure
Modifications
CIP (2018-52)

EXHIBIT B
BUILDING 8 TRASH ENCLOSURE

Sheet 4 of 4

NOT TO SCALE

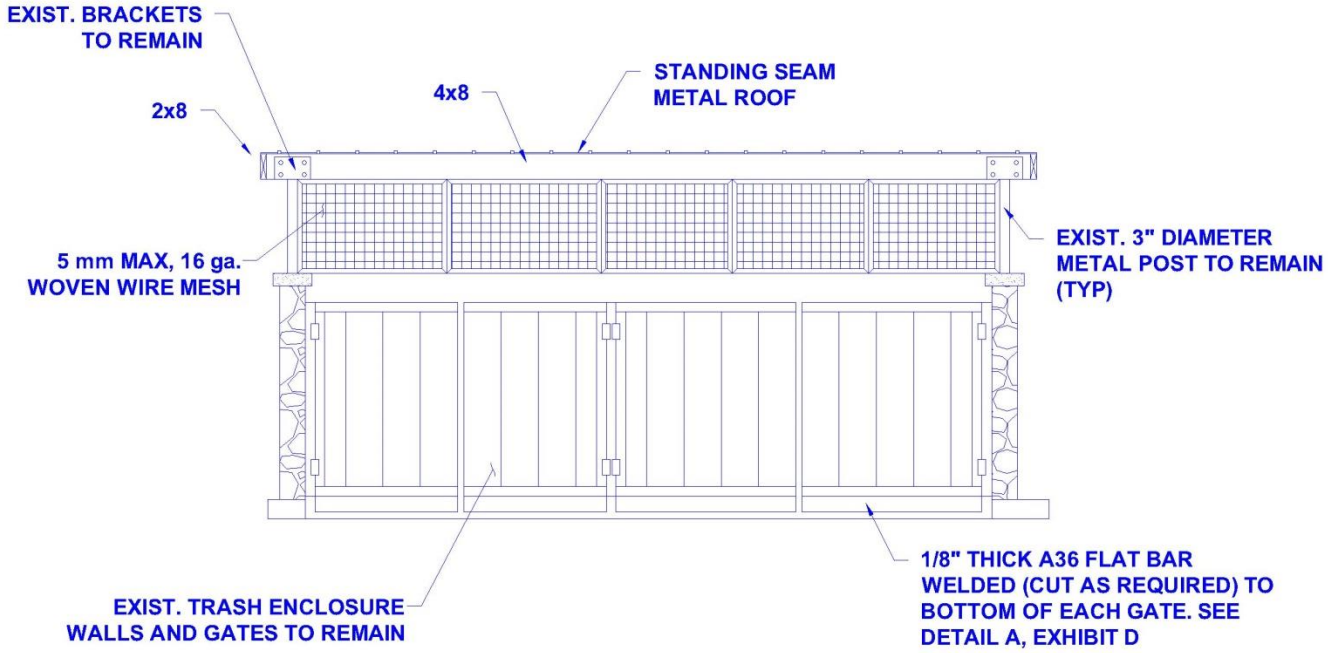

FRONT ELEVATION

City Hall Trash Enclosure
Modifications
CIP (2018-52)

EXHIBIT C
BUILDING 1 TRASH ENCLOSURE

Sheet 1 of 4

NOT TO SCALE

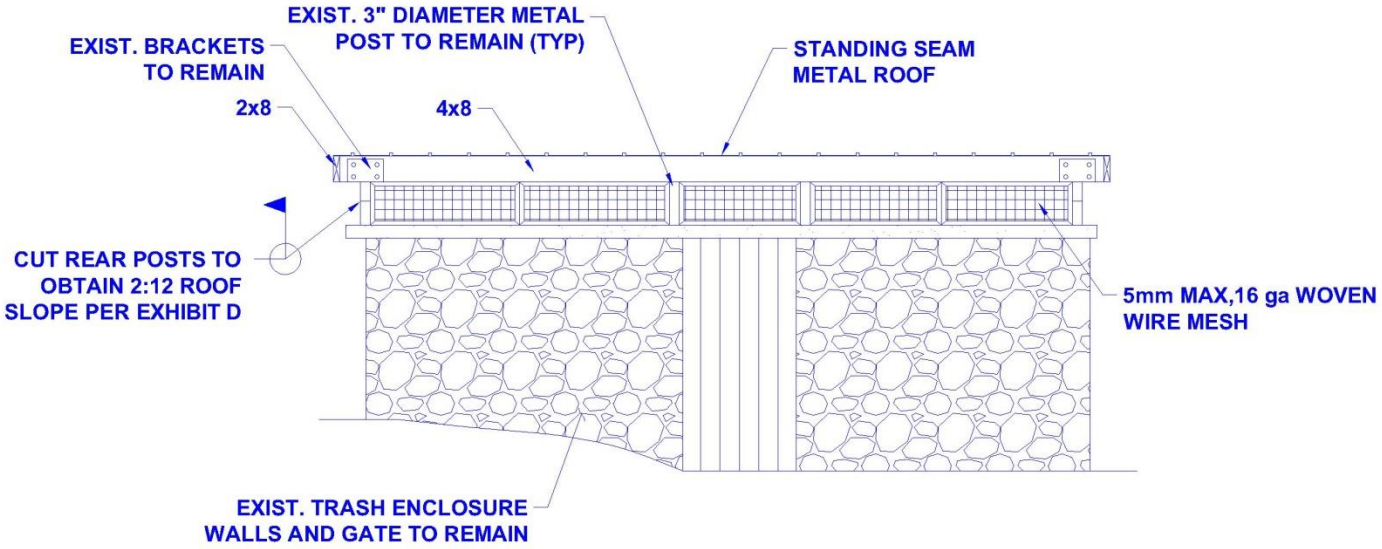

REAR ELEVATION

City Hall Trash Enclosure Modifications
CIP (2018-52)

EXHIBIT C
BUILDING 1 TRASH ENCLOSURE

Sheet 2 of 4

NOT TO SCALE

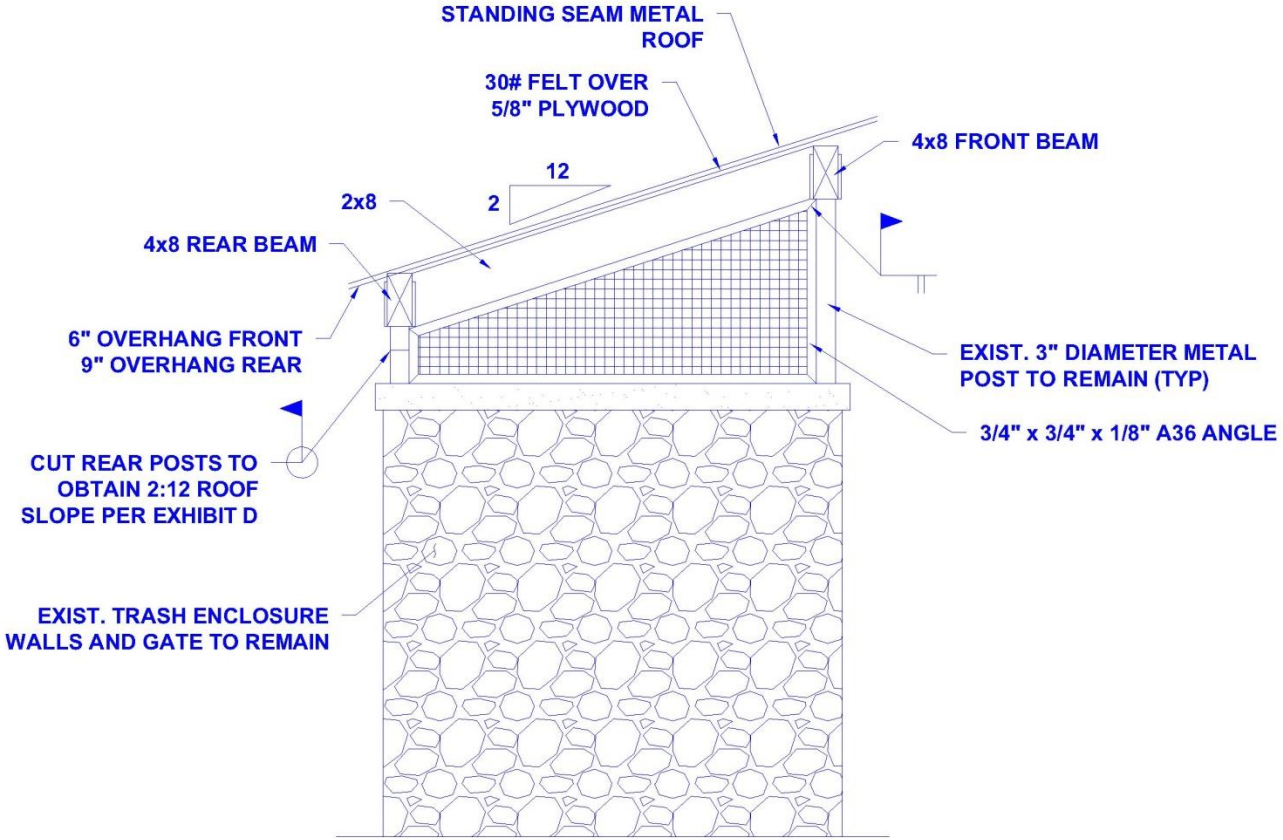

SIDE ELEVATION

City Hall Trash Enclosure
Modifications
CIP (2018-52)

EXHIBIT C
BUILDING 1 TRASH ENCLOSURE

Sheet 3 of 4

NOT TO SCALE

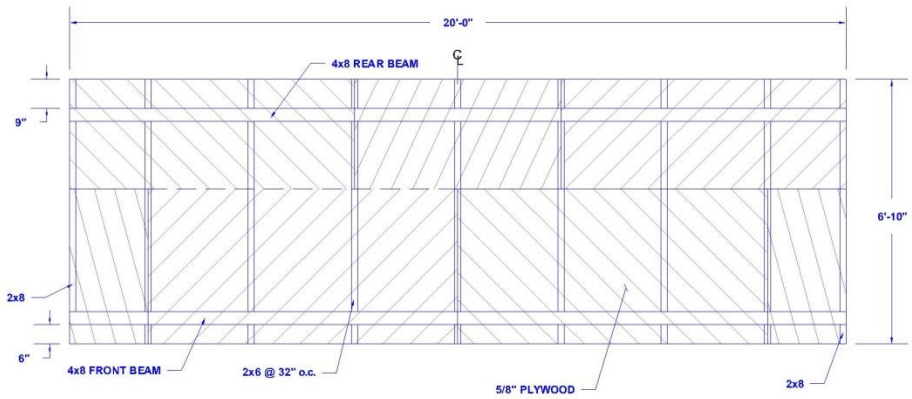

ROOF PLAN

City Hall Trash Enclosure
Modifications
CIP (2018-52)

EXHIBIT C
BUILDING 1 TRASH ENCLOSURE

Sheet 4 of 4

NOT TO SCALE

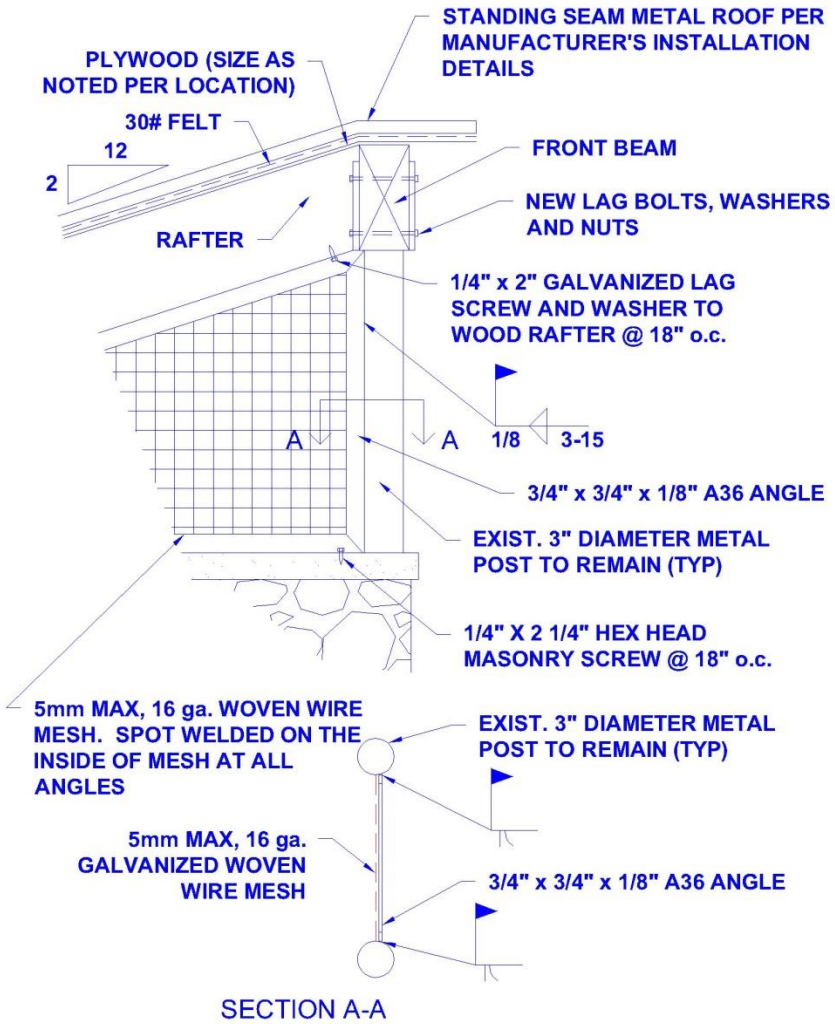

SECTION A-A

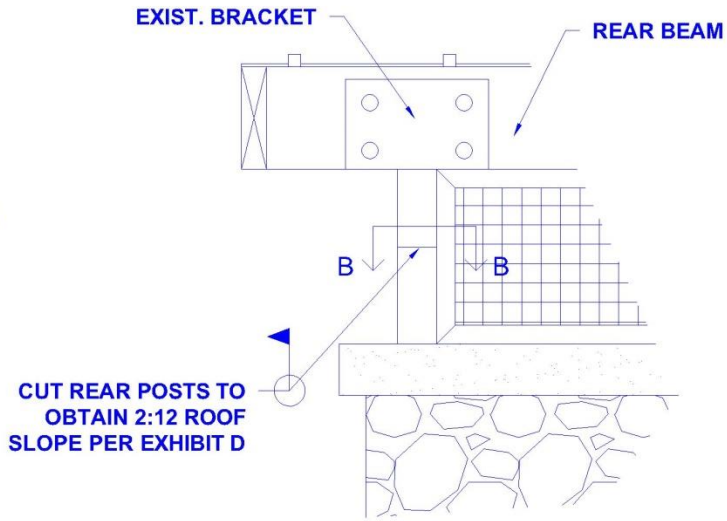

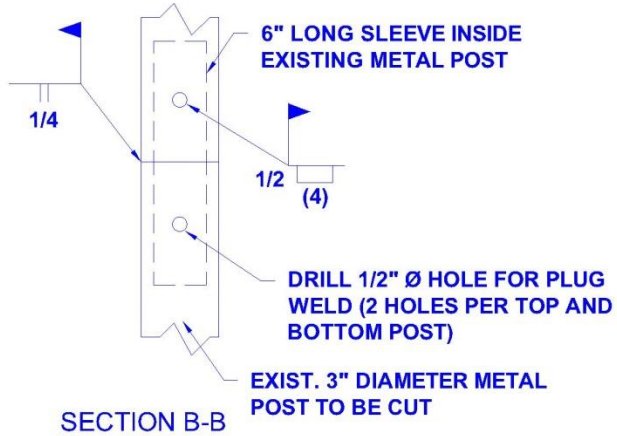

SECTION B-B

City Hall Trash Enclosure Modifications
CIP (2018-52)

EXHIBIT D
BUILDING 1 & 8 TRASH ENCLOSURE DETAILS

Sheet 1 of 2

NOT TO SCALE

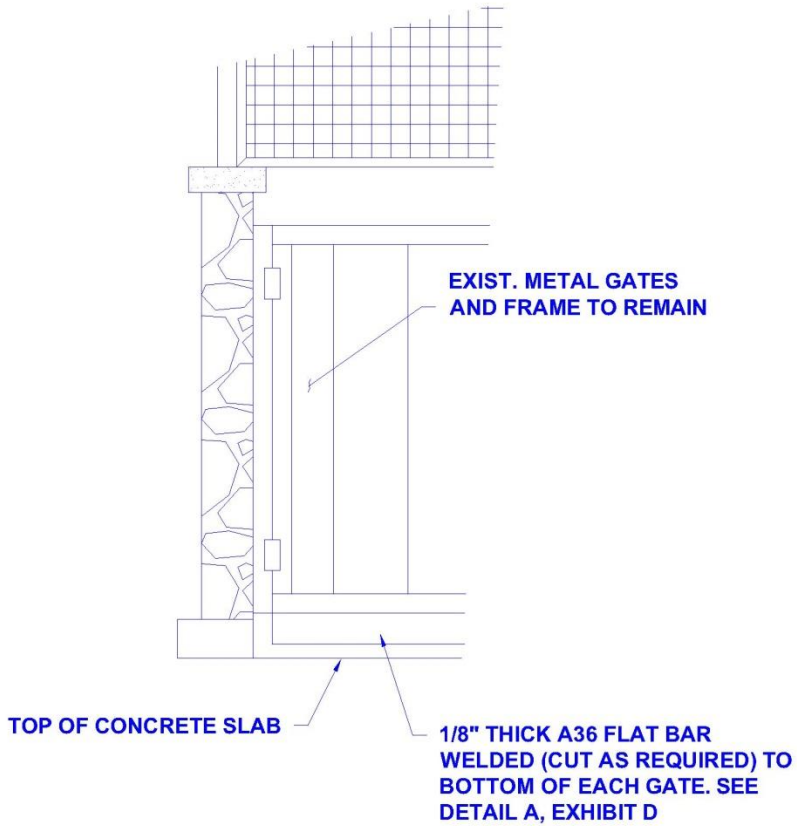

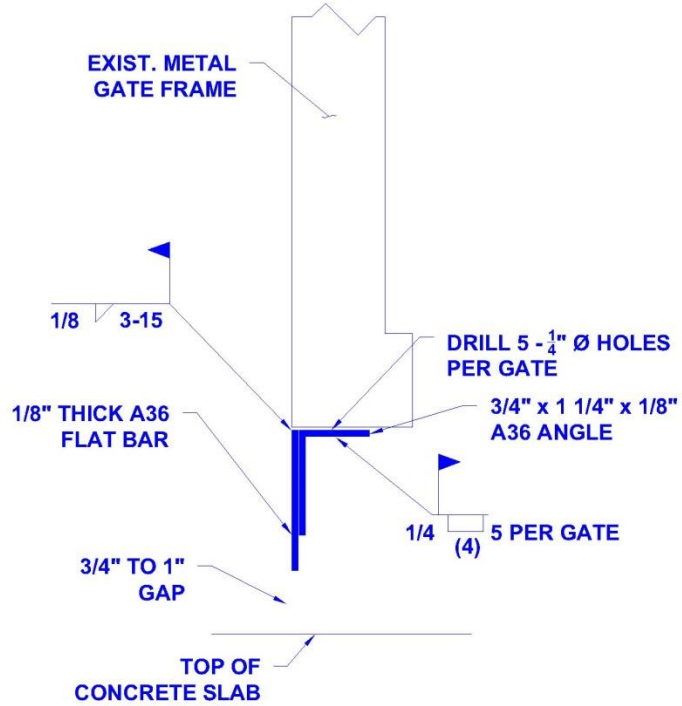

DETAIL A

EXHIBIT D
BUILDING 1 & 8 TRASH ENCLOSURE DETAILS

City Hall Trash Enclosure
Modifications
CIP (2018-52)

Sheet 2 of 2

NOT TO SCALE

CITY OF SANTEE, CALIFORNIA
DEPARTMENT OF DEVELOPMENT SERVICES

BID SUBMITTAL PACKAGE
FOR

CITY HALL TRASH ENCLOSURE MODIFICATIONS
CIP 2018-52

March 2020

PROJECT NUMBER: CIP 2018-52

BID OPENING DATE: April 2, 2020 at 10:00 am

THIS PACKAGE CONTAINS THE DOCUMENTS REQUIRED TO BE SUBMITTED AT THE TIME OF BID AS THE BIDDERS RESPONSE TO THE CITY'S NOTICE INVITING BIDS. THIS PACKAGE IS TO BE REMOVED FROM THE BID DOCUMENTS, STAPLED, AND SUBMITTED IN A SEALED ENVELOPE WITH THE BIDDERS CONTACT INFORMATION LABELED.

BIDDERS CHECK LIST

THE FOLLOWING DOCUMENTS MUST BE SUBMITTED TO COMPRISE A COMPLETE BID.

_____ Submitted in a Sealed Envelope Bearing the name of the bidder, the bidder's address, the name of the project for which the bid is submitted and appropriate State Contractor's license designation held by the bidder

_____ Acknowledgement on the Information Required of Bidder or attachment of any addendum to the bid that is issued prior to the bid opening

_____ Proposal

_____ Bid Schedule

_____ Signature Sheet (must be signed and notarized)

_____ Bid Bond (must be signed, notarized, with Surety's Power of Attorney)

_____ Information Required of Bidder

_____ Designation of Subcontractors

_____ Public Works Contractors Registration Certification

_____ Guarantee

_____ Non-Collusion Affidavit (must be signed and notarized)

THE FOLLOWING SAMPLE DOCUMENTS ARE FOR INFORMATION ONLY, AND WILL ONLY BE COMPLETED BY THE SUCCESSFUL BIDDER.

Contract Agreement

Performance Bond

Payment Bond (Labor and Material Bond)

Workers Compensation Insurance Declaration

PROPOSAL

FOR

CITY HALL TRASH ENCLOSURE MODIFICATIONS
CIP 2018-52

FROM:

Name of Bidder: _____

Contact Name: _____

Business Address: _____

_____

Telephone No.: _____

Fax No.: _____

Email: _____

License No.: _____Class(es)_____

Expiration Date: _____

DIR Registration No.: _____

TO:

CITY OF SANTEE
The Honorable Mayor and
Members of the City Council

Pursuant to your Notice Inviting Sealed Bids on proposals for:

CITY HALL TRASH ENCLOSURE MODIFICATIONS
CIP 2018-52

The undersigned, as bidder, declares that he has carefully examined the location of the proposed work; that he has carefully examined the Plans and Specifications; and read the accompanying information for Bidders; and hereby proposes to furnish all materials, machinery, tools, labor and services, and do all the work necessary to complete the project in accordance with said Plans, Specifications and Special Provisions, at the following prices:

BID SCHEDULE

CITY HALL TRASH ENCLOSURE MODIFICATIONS
CIP 2018-52

The estimated quantities and total cost herein set forth are for the purpose of comparison of bids only, and final payment will be made upon the basis of actual quantities and unit prices bid. The City reserves the right to vary these quantities by up to 25-percent without renegotiating the item unit prices.

BASE BID					
No.	**Description**	**Quantity**	**Unit**	**Unit Price**	**Total**
1	Mobilization	1	LS	$	$
2	Remove Trash Enclosure (Building 3)	1	LS	$	$
3	Remove Trash Enclosure (Building 5)	1	LS	$	$
4	Trash Enclosure (Building 1)	1	LS	$	$
5	Trash Enclosure (Building 8)	1	LS	$	$
6	Field Directed Changes	1	LS	$ 10,000.00	$ 10,000.00
			Total Base Bid	$	

SIGNATURE SHEET

CITY HALL TRASH ENCLOSURE MODIFICATIONS
CIP 2018-52

The undersigned agrees that all of the work included in the Proposal shall be completed in accordance with Section 6-7 of these Specifications. The undersigned further agrees that in case of default in executing the required Contract with necessary Bonds and Insurance within ten (10) working days, after having received notice that the Contract has been awarded, the proceeds of the check or bond accompanying his bid shall become property of the City of Santee. The undersigned also agrees that the statement of Contractor's license, class designation and expiration date is made under the penalty of perjury.

*Bidder's Name: _____

Signatory's Name: _____*(Print)*

Title:_____

Signature: _____

Date: _____

*If an individual, so state. If a firm or partnership, state the firm name, and give the names and addresses of all individuals and/or copartners composing the firm. If a corporation, state the legal name of the corporation; also the names of the President, Secretary, Manager, and Treasurer thereof, with their business addresses:

_____

_____

If a corporation, chartered under the laws of the State of _____

***NOTE: THE FOLLOWING NOTARIAL ACKNOWLEDGEMENTS OF EXECUTION BY CONTRACTOR MUST BE COMPLETED AND ATTACHED.**

Notary Acknowledgment

A notary public or other officer completing this certificate verifies only the identity of the individual who signed the document to which this certificate is attached, and not the truthfulness, accuracy, or validity of that document.

STATE OF CALIFORNIA
COUNTY OF _____

On _____, 20___, before me, _____, Notary Public, personally
Date — Name And Title Of Officer (e.g. "Jane Doe, Notary Public")
appeared _____, who proved to me on the basis of satisfactory
Name(s) of Signer(s)
evidence to be the person(s) whose name(s) is/are subscribed to the within instrument and acknowledged to me that he/she/they executed the same in his/her/their authorized capacity(ies), and that by his/her/their signature(s) on the instrument the person(s), or the entity upon behalf of which the person(s) acted, executed the instrument.

I certify under PENALTY OF PERJURY under the laws of the State of California that the foregoing paragraph is true and correct.

WITNESS my hand and official seal.

Place Notary Seal Above

_____
Signature of Notary Public

OPTIONAL

Though the information below is not required by law, it may prove valuable to persons relying on the document and could prevent fraudulent removal and reattachment of this form to another document.

CAPACITY CLAIMED BY SIGNER

☐ Individual
☐ Corporate Officer

_____
Title(s)

☐ Partner(s) ☐ Limited ☐ General
☐ Attorney-In-Fact
☐ Trustee(s)
☐ Guardian/Conservator
☐ Other:
Signer is representing:
Name Of Person(s) Or Entity(ies)

_____
_____

DESCRIPTION OF ATTACHED DOCUMENT

_____
Title or Type of Document

_____
Number of Pages

_____
Date of Document

_____
Signer(s) Other Than Named Above

BID BOND

FOR

CITY HALL TRASH ENCLOSURE MODIFICATIONS
CIP 2018-52

KNOW ALL MEN BY THESE PRESENTS that:_____
_____, as Contractor, and
_____, as Surety,
are held firmly bound unto the City of Santee, a Municipal Corporation, herein after called City, in the sum of: _____
_____($_____)Dollars,
(not less than ten percent of the total amount of the bid), for the payment of which sum well and truly to be made, we bind ourselves, our heirs, executors, administrators, successors, and assigned, jointly and severally, firmly by these presents.

WHEREAS, said Contractor has submitted a bid to said City to perform all work required under the Bid Schedule for:

CITY HALL TRASH ENCLOSURE MODIFICATIONS
CIP 2018-52

NOW, THEREFORE, if said Contractor is awarded a Contract by said City and, within the time and in the manner required under the heading "Information for Bidders" bound with said Specifications, enters into a written Contracts in the form of the Agreement bound with said Specifications, and furnishes the required bonds, one to guarantee faithful performance and the other to guarantee payment for material and labor, and the required insurance certificates, then this obligation shall be null and void, otherwise it shall remain in full force and effect. In the event suit is brought upon this bond by said City and judgment is recovered, said Surety shall pay all costs incurred by said City in such suit, including a reasonable attorney's fee to be fixed by the court.

*SIGNED AND SEALED, this ____ day of _____, 2020.

Contractor:	SURETY
By: _____	By:_____
Signature	Signature

***NOTE: THE FOLLOWING NOTARIAL ACKNOWLEDGEMENTS OF EXECUTION BY CONTRACTOR AND SURETY MUST BE COMPLETED AND ATTACHED. THE SURETY'S POWER OF ATTORNEY MUST ALSO BE ATTACHED.**

BID BOND
(Continued)

Contractor:

Notary Acknowledgment

A notary public or other officer completing this certificate verifies only the identity of the individual who signed the document to which this certificate is attached, and not the truthfulness, accuracy, or validity of that document.

STATE OF CALIFORNIA
COUNTY OF _____

On _____, 20___, before me, _____, Notary Public, personally
Date — Name And Title Of Officer (e.g. "Jane Doe, Notary Public")
appeared _____, who proved to me on the basis of satisfactory
Name(s) of Signer(s)
evidence to be the person(s) whose name(s) is/are subscribed to the within instrument and acknowledged to me that he/she/they executed the same in his/her/their authorized capacity(ies), and that by his/her/their signature(s) on the instrument the person(s), or the entity upon behalf of which the person(s) acted, executed the instrument.

I certify under PENALTY OF PERJURY under the laws of the State of California that the foregoing paragraph is true and correct.

WITNESS my hand and official seal.

Place Notary Seal Above

_____
Signature of Notary Public

OPTIONAL

Though the information below is not required by law, it may prove valuable to persons relying on the document and could prevent fraudulent removal and reattachment of this form to another document.

CAPACITY CLAIMED BY SIGNER

☐ Individual
☐ Corporate Officer

_____
Title(s)

☐ Partner(s) ☐ Limited ☐ General
☐ Attorney-In-Fact
☐ Trustee(s)
☐ Guardian/Conservator
☐ Other:
Signer is representing:
Name Of Person(s) Or Entity(ies)

_____
_____

DESCRIPTION OF ATTACHED DOCUMENT

_____
Title or Type of Document

_____
Number of Pages

_____
Date of Document

_____
Signer(s) Other Than Named Above

BID BOND
(Continued)

Surety:

Notary Acknowledgment

A notary public or other officer completing this certificate verifies only the identity of the individual who signed the document to which this certificate is attached, and not the truthfulness, accuracy, or validity of that document.

STATE OF CALIFORNIA
COUNTY OF _____

On _____, 20___, before me, _____, Notary Public, personally
Date — Name And Title Of Officer (e.g. "Jane Doe, Notary Public")
appeared _____, who proved to me on the basis of satisfactory
Name(s) of Signer(s)
evidence to be the person(s) whose name(s) is/are subscribed to the within instrument and acknowledged to me that he/she/they executed the same in his/her/their authorized capacity(ies), and that by his/her/their signature(s) on the instrument the person(s), or the entity upon behalf of which the person(s) acted, executed the instrument.

I certify under PENALTY OF PERJURY under the laws of the State of California that the foregoing paragraph is true and correct.

WITNESS my hand and official seal.

Place Notary Seal Above

_____
Signature of Notary Public

OPTIONAL

Though the information below is not required by law, it may prove valuable to persons relying on the document and could prevent fraudulent removal and reattachment of this form to another document.

CAPACITY CLAIMED BY SIGNER

☐ Individual
☐ Corporate Officer

_____
Title(s)

☐ Partner(s) ☐ Limited ☐ General
☐ Attorney-In-Fact
☐ Trustee(s)
☐ Guardian/Conservator
☐ Other:
Signer is representing:
Name Of Person(s) Or Entity(ies)

_____
_____

DESCRIPTION OF ATTACHED DOCUMENT

_____
Title or Type of Document

_____
Number of Pages

_____
Date of Document

_____
Signer(s) Other Than Named Above

(Attach Surety's Power Of Attorney)

INFORMATION REQUIRED OF BIDDER
CITY HALL TRASH ENCLOSURE MODIFICATIONS
CIP 2018-52

The City expressly reserves the right to reject the bid of any bidder who, upon investigation, has been determined to fail to complete similar contracts in a timely fashion or in a satisfactory manner. Such rejection would, if applicable, be based upon the principle that the bidder is "non-responsible" and poses a substantial risk of being unable to complete the work in a cost-effective, professional and timely manner.

In performing the above-described responsibility determination, the City reserves the right to utilize all possible sources of information in making its determination, including but not limited to: inquiries to regulatory State Boards and agencies; Dun and Bradstreet credit reports, inquiries to companies and public entities for which the Contractor has previously performed work, reference checks and examination of all public records.

1. Contractor shall acknowledge the receipt of all addenda's as received, by listing

   them here: _____, _____, _____, _____, _____. (Check for none ☐)

2. Number of years' experience as a Contractor in construction work: _____

3. List the name of the person from your firm who inspected the proposed work site.

   Name:_____ Date of Inspection:_____

4. List at least three similar projects completed as of recent date:

   1) Contract Amount:_____
      Type of Work:_____
      Date Completed:_____
      Owners Information:
         Name:_____
         Phone:_____
         Email:_____

   2) Contract Amount:_____
      Type of Work:_____
      Date Completed:_____
      Owners Information:
         Name:_____
         Phone:_____
         Email:_____

   3) Contract Amount:_____
      Type of Work:_____
      Date Completed:_____
      Owners Information:
         Name:_____

Phone:_____
Email:_____

4) Contract Amount:_____
Type of Work:_____
Date Completed:_____
Owners Information:
Name:_____
Phone:_____
Email:_____

5) Contract Amount:_____
Type of Work:_____
Date Completed:_____
Owners Information:
Name:_____
Phone:_____
Email:_____

6) Contract Amount:_____
Type of Work:_____
Date Completed:_____
Owners Information:
Name:_____
Phone:_____
Email:_____

DESIGNATION OF SUBCONTRACTORS

In compliance with the Subletting and Subcontracting Fair Practices Act of the Public Contract Code of the State of California, sections 4100 et seq., each bidder shall set forth below: (a) the name and the location of the place of business and (b) the portion of the work which will be done by each subcontractor who will perform work or labor or render service to the Contractor in or about the construction of the work in an amount in excess of one-half of one percent (1/2%) of the Contractor's Total Bid Price. Notwithstanding the foregoing, if the work involves streets and highways, then the Contractor shall list each subcontractor who will perform work or labor or render service to Contractor in or about the work in an amount in excess of one-half of one percent (1/2%) of the Contractor's total Bid Price or $10,000, whichever is greater. No additional time shall be granted to provide the below requested information.

If no subcontractor is specified, for a portion of the work, the Contractor shall be deemed to have agreed that it is fully qualified to perform that Work, and that it shall perform that portion itself.

If no subcontractors meet the above requirements, and/or bidder is self-performing all work, check here ☐

List Subcontractors below:

1) Name:_____
Address:_____
_____
Phone No.:_____
License No.:_____ Expiration Date:_____
DIR Registration No.:_____
Work Type:_____
Amount of Work by Subcontractor in Dollars $_____

2) Name:_____
Address:_____
_____
Phone No.:_____
License No.:_____ Expiration Date:_____
DIR Registration No.:_____
Work Type:_____
Amount of Work by Subcontractor in Dollars $_____

3) Name:_____
Address:_____
_____
Phone No.:_____
License No.:_____ Expiration Date:_____
DIR Registration No.:_____
Work Type:_____
Amount of Work by Subcontractor in Dollars $_____

4) Name:_____
Address:_____
_____
Phone No.:_____
License No.:_____ Expiration Date:_____
DIR Registration No.:_____
Work Type:_____
Amount of Work by Subcontractor in Dollars $_____

5) Name:_____
Address:_____
_____
Phone No.:_____
License No.:_____ Expiration Date:_____
DIR Registration No.:_____
Work Type:_____
Amount of Work by Subcontractor in Dollars $_____

6) Name:_____
Address:_____
_____
Phone No.:_____
License No.:_____ Expiration Date:_____
DIR Registration No.:_____
Work Type:_____
Amount of Work by Subcontractor in Dollars $_____

*Use an additional sheet if needed

Bidders Name: _____

Signatory's Name: _____*(Print)*

Title:_____

Signature: _____

Date: _____

PUBLIC WORKS CONTRACTOR REGISTRATION CERTIFICATION

Pursuant to Labor Code sections 1725.5 and 1771.1, all contractors and subcontractors that wish to bid on, be listed in a bid proposal, or enter into a contract to perform public work must be registered with the Department of Industrial Relations. See http://www.dir.ca.gov/Public-Works/PublicWorks.html for additional information.

No bid will be accepted nor any contract entered into without proof of the contractor's and subcontractors' current registration with the Department of Industrial Relations to perform public work.

Bidder hereby certifies that it is aware of the registration requirements set forth in Labor Code sections 1725.5 and 1771.1 and is currently registered as a contractor with the Department of Industrial Relations.

Bidders Name: _____

DIR Registration Number:_____

Bidder further acknowledges:

1. Bidder shall maintain a current DIR registration for the duration of the project.

2. Bidder shall include the requirements of Labor Code sections 1725.5 and 1771.1 in its contract with subcontractors and ensure that all subcontractors are registered at the time of bid opening and maintain registration status for the duration of the project.

3. Failure to submit this form or comply with any of the above requirements may result in a finding that the bid is non-responsive.

Bidders Name: _____

Signatory's Name: _____*(Print)*

Title:_____

Signature: _____

Date: _____

GUARANTEE

To the City of Santee:

The undersigned guarantees the construction and installation of all work included in the following project:

CITY HALL TRASH ENCLOSURE MODIFICATIONS
CIP 2018-52

Should any of the materials or equipment prove defective or should the work as a whole prove defective due to faulty workmanship, material furnished, or methods of installation, or should the work or any part thereof fail to operate properly as originally intended and in accordance with the plans and specifications due to any of the above causes all within twelve (12) months after the date on which this Contract is accepted by the Santee City Council, the undersigned agrees to reimburse the City upon demand for its expenses incurred in restoring said work to the condition contemplated in said project, including the cost of any such equipment or materials replaced and the cost of removing and replacing any other work necessary to make such replacement or repairs or upon demand by the City of Santee to replace any such material and to repair said work completely without cost to the City of Santee so that said work will function successfully as originally contemplated.

The City of Santee shall have the unqualified option to make any needed replacements or repairs itself or to have such replacements or repairs done by the undersigned. In the event the City of Santee elects to have said work performed by the undersigned, the undersigned agrees that the repairs shall be made and such materials as are necessary shall be furnished and installed within a reasonable time after the receipt of demand from the City of Santee. If the undersigned shall fail or refuse to comply with its obligations under this guaranty, The City of Santee shall be entitled to all costs and expenses, including attorneys' fees, reasonably incurred by reason of the said failure or refusal.

Bidders Name: _____

Signatory's Name: _____*(Print)*

Title:_____

Signature: _____

Date: _____

CITY OF SANTEE
PROPOSAL
NON-COLLUSION AFFIDAVIT / DECLARATION

CITY HALL TRASH ENCLOSURE MODIFICATIONS
CIP 2018-52

(To be executed by Bidder and submitted with bid)

State of California)
) ss.
County of _____)

I,_____, being first duly sworn, deposes and says that he is _____ of _____ the party making the attached bid; that the bid is not made in the interest of, or on behalf of, any undisclosed person, partnership, company, association, organization, or corporation; that the bid is genuine and not collusive or sham; that the bidder has not directly or indirectly induced or solicited any other bidder to put in a false or sham bid, and has not directly or indirectly colluded, conspired, connived, or agreed with any bidder or anyone else to put in a sham bid, or that anyone shall refrain from bidding; that the bidder has not in any manner, directly or indirectly, sought by agreement, communication, or conference with anyone to fix the bid price of the bidder or any other bidder, or to fix any overhead, profit, or cost element of the bid price, or of that of any other bidder, or to secure any advantage against the public body awarding the contract of anyone interested in the proposed contract; that all statements contained in the bid are true; and, further, that the bidder has not, directly or indirectly, submitted his or her bid price or any breakdown thereof, or the contents thereof, or divulged information or data relative thereto, or paid, and will not pay, any fee to any corporation, partnership, company association, organization, bid depository, or to any member or agent thereof to effectuate a collusive or sham bid.

I certify (or declare) under penalty of perjury under the laws of the State of California that the foregoing is true and correct.

Executed this _____ day of _____, 2020 at _____, California.

Signature of Bidder _____

Print Name and Title _____

***NOTE: THE FOLLOWING NOTARIAL ACKNOWLEDGEMENTS OF EXECUTION BY CONTRACTOR MUST BE COMPLETED AND ATTACHED.**

NON-COLLUSION AFFIDAVIT / DECLARATION
(Continued)

Notary Acknowledgment

A notary public or other officer completing this certificate verifies only the identity of the individual who signed the document to which this certificate is attached, and not the truthfulness, accuracy, or validity of that document.

STATE OF CALIFORNIA
COUNTY OF _____

On _____, 20___, before me, _____, Notary Public, personally
Date — Name And Title Of Officer (e.g. "Jane Doe, Notary Public")
appeared _____, who proved to me on the basis of satisfactory
Name(s) of Signer(s)
evidence to be the person(s) whose name(s) is/are subscribed to the within instrument and acknowledged to me that he/she/they executed the same in his/her/their authorized capacity(ies), and that by his/her/their signature(s) on the instrument the person(s), or the entity upon behalf of which the person(s) acted, executed the instrument.

I certify under PENALTY OF PERJURY under the laws of the State of California that the foregoing paragraph is true and correct.

WITNESS my hand and official seal.

Place Notary Seal Above

_____
Signature of Notary Public

OPTIONAL

Though the information below is not required by law, it may prove valuable to persons relying on the document and could prevent fraudulent removal and reattachment of this form to another document.

CAPACITY CLAIMED BY SIGNER

☐ Individual
☐ Corporate Officer

_____
Title(s)

☐ Partner(s) ☐ Limited ☐ General
☐ Attorney-In-Fact
☐ Trustee(s)
☐ Guardian/Conservator
☐ Other:
Signer is representing:
Name Of Person(s) Or Entity(ies)

_____
_____

DESCRIPTION OF ATTACHED DOCUMENT

_____
Title or Type of Document

_____
Number of Pages

_____
Date of Document

_____
Signer(s) Other Than Named Above

SAMPLE CONTRACT DOCUMENTS

The following documents are to be executed by the lowest responsive & responsible bidder after award of contract.

- Contract Agreement
- Performance Bond
- Payment Bond
- Workers Compensation Insurance Declaration

AGREEMENT

FOR

CITY HALL TRASH ENCLOSURE MODIFICATIONS
CIP 2018-52

THIS AGREEMENT, made and concluded in duplicate, this _____ day of _____ 2020, between the City of Santee, hereinafter referred to as "City," and _____ _____, hereinafter referred to as "Contractor".

ARTICLE I. WITNESSETH, that for and in consideration of the payments and agreements hereinafter mentioned, to be made and performed by the City, and under the conditions expressed in the bond, bearing even date with these presents, and hereunto annexed, the said Contractor agrees with the City, at his own proper cost and expense, to do all the work and furnish all the materials necessary to construct the:

CITY HALL TRASH ENCLOSURE MODIFICATIONS
CIP 2018-52

complete in place, in a good, workmanlike and substantial manner and to the satisfaction of the Director of Development Services, City of Santee, in accordance with the Special Provisions hereto annexed, the current Prevailing Wages on file at the Department of Development Services, and the latest edition of the Standard Specifications for Public Works Construction, and all addenda thereto, except as modified in the Special Provisions.

ARTICLE II. Said Contractor agrees to receive and accept the unit price bid as full compensation for furnishing all materials and doing all the work contemplated and embraced in this Agreement; for all loss or damage arising out of the nature of the work aforesaid, or from the acts of the elements, or from any unforeseen difficulties of the work until its acceptance by the City and for all risks of every description connected with the work; also for all expenses incurred by or in consequence of the suspension or discontinuance of work, and for well and faithfully completing the work, and the whole thereof, in the manner and according to the Plans and Specifications, and requirements of the Engineer under them, to wit:

BID SCHEDULE

The estimated quantities and total cost herein set forth are for the purpose of comparison of bids only, and final payment will be made upon the basis of actual quantities and unit prices bid. City reserves the right to vary these quantities by up to 25-percent without renegotiating the item unit prices.

BASE BID					
No.	**Description**	**Quantity**	**Unit**	**Unit Price**	**Total**
1	Mobilization		LS	$	$
2	Remove Trash Enclosure (Building 3)		LS	$	$
3	Remove Trash Enclosure (Building 5)		LS	$	$
4	Trash Enclosure (Building 1)		LS	$	$
5	Trash Enclosure (Building 8)		LS	$	$
6	Field Directed Changes	1	LS	$ 10,000.00	$ 10,000.00
			Total Base Bid	$	

ARTICLE III. The City hereby promises and agrees with the Contractor to employ, and does hereby employ the Contractor to provide the materials and to do the work according to the terms and conditions herein contained and referred to, for the sum aforesaid, and hereby contracts to pay the same at the time, in the manner, and upon the conditions above set forth; and the said parties for themselves, their heirs, executors, administrators, successors, and assigns, do hereby agree to the full performance of the covenants herein contained.

ARTICLE IV. It is further expressly agreed by and between the parties hereto that should there be any conflict between the terms of this instrument and the bid or proposal of the Contractor, then this instrument shall control and nothing herein shall be considered as an acceptance of the said terms of proposal conflicting herewith.

ARTICLE V. The agreement entered into by this Contract consists of the following Contract Documents, all of which are component parts of the Contract as if herein set out in full or attached hereto:

Notice Inviting Sealed Bids
Information for Bidders
Proposal
Signature Sheet
Bid Bond
Information Required of Bidder
Designation of Subcontractors
Public Works Contractor Registration Certification
Guarantee
Non-Collusion Affidavit / Declaration
Agreement
Performance Bond
Payment Bond (Material and Labor Bond)
Worker's Compensation Insurance Certificate
    Insurance Policies/OCIP
    All Contractor Certifications
    Addenda No's. _____, _____, _____, as issued
    Drawings, Plans, and Specifications
    Greenbook Standard Specifications as modified by the Special Provisions

ARTICLE VI. DRUG FREE WORKPLACE. Contractor shall publish and distribute to all employees, workers and Subcontractors (hereinafter worker) a statement notifying worker that the unlawful manufacture, distribution, dispensing, possession, or use of a controlled substance is prohibited. Any worker under the effect or residual effect of such controlled substance is considered a hazard and shall be removed from the job site immediately. This notice shall state that the worker has an obligation to abide by the terms of this Article and to notify the Contractor in writing of any violation of a criminal drug statute occurring in the workplace or at the job site. Contractor shall notify City of such incident and take appropriate action within thirty (30) days. Appropriate action shall include either disciplinary measures or required participation in a drug abuse assistance or rehabilitation program.

ARTICLE VII. PROVISIONS REQUIRED BY LAW. Each and every provision of law and clause required to be inserted in this Contract shall be deemed to be inserted herein and this Contract shall be read and enforced as though it were included herein, and if through mistake or otherwise any such provision is not inserted or is not inserted correctly, then upon application of either party the Contract shall forthwith by physically amended to make such insertion or correction.

ARTICLE VIII. SUBSTITUTION OF SECURITIES. It is understood that at the request and expense of the Contractor, the City will pay the amounts retained pursuant to these Contract Documents as security for the completion of the work in compliance with the requirements of Public Contract Code Section 22300.

ARTICLE IX. TIME FOR COMPLETION. Time for completion shall include all time necessary to complete the work including any punch list items, the submission of any required operation and maintenance manuals, and all warranties. The work shall be commenced on the date stated in the City's Notice to Proceed. As specified in the contract documents and the City's Notice to Proceed, the work shall be completed **25 working days** from and after the date stated in such notice. The Contractor shall be entitled to an extension of working time under this contract only when claim for such extension is submitted to the City in writing within seven (7) days from and after the time when any alleged cause of delay shall occur; and only when such time is approved by the City. The City, and only the City, will determine which days, if any, may be considered rain days.

In entering into this Contract, Contractor acknowledges and agrees that the construction duration stipulated herein is adequate and reasonable for the size and scope of the Project.

ARTICLE X. LIQUIDATED DAMAGES. It is agreed that the Contractor will pay the City the sum of **Five Hundred Dollars ($500.00)** per day for each and every day of delay beyond the time prescribed in the Contract Documents for finishing said work, as Liquidated Damages and not as a penalty or forfeiture. In the event the same is not paid, the Contractor further agrees that the City may deduct that amount thereof from any money due or that may become due the Contractor under the Contract. This Article does not exclude recovery of damages under provisions of the Contract Documents.

ARTICLE XI. INDEMNIFICATION. The Contractor shall indemnify, defend and hold harmless the City of Santee, its officers, agents, volunteers and employees from any claim, liability, loss, injury or damage arising out of, or in connection with, performance of this Agreement by Contractor and/or its agents, employees or Subcontractors, excepting only loss, injury or damage caused by the sole negligence or willful misconduct of personnel employed by the City. It is the intent of the parties to this Agreement to provide the broadest possible coverage for the City. The Contractor shall reimburse the City for all costs attorneys' fees, expenses and liabilities incurred with respect to any litigation in which the Contractor is obligated to indemnify, defend and hold harmless the City under this Agreement.

ARTICLE XII. PREVAILING WAGES. The Contractor shall pay not less than the prevailing rate of wages in accordance with the Labor Code, which rates have been determined by the Director of the California Department of Industrial Relations and shall

be made available at the City of Santee, Office of the Director of Development Services, 10601 Magnolia Avenue, Santee, CA 92071 or may be obtained online at http//www.dir.ca.gov/dlse.

IN WITNESS WHEREOF, the parties to these presents have hereunto set their hand the year and date first above written.

Contractor

Company Name:_____

Signatory Name: _____*(Print)*

Title: _____

Signature: _____

Date: _____

Contractor's License No.: _____

DIR Registration No.: _____

City Business License No.: _____

CITY OF SANTEE

By: _____ Date: _____
City Manager of the City of Santee

Attest: _____ Date: _____
City Clerk of the City of Santee

APPROVED AS TO FORM:

By: _____
City Attorney of the City of Santee

***NOTE: THE FOLLOWING NOTARIAL ACKNOWLEDGEMENTS OF EXECUTION BY CONTRACTOR MUST BE COMPLETED AND ATTACHED.**

Notary Acknowledgment

A notary public or other officer completing this certificate verifies only the identity of the individual who signed the document to which this certificate is attached, and not the truthfulness, accuracy, or validity of that document.

STATE OF CALIFORNIA
COUNTY OF _____

On _____, 20___, before me, _____, Notary Public, personally
Date — Name And Title Of Officer (e.g. "Jane Doe, Notary Public")
appeared _____, who proved to me on the basis of satisfactory
Name(s) of Signer(s)
evidence to be the person(s) whose name(s) is/are subscribed to the within instrument and acknowledged to me that he/she/they executed the same in his/her/their authorized capacity(ies), and that by his/her/their signature(s) on the instrument the person(s), or the entity upon behalf of which the person(s) acted, executed the instrument.

I certify under PENALTY OF PERJURY under the laws of the State of California that the foregoing paragraph is true and correct.

WITNESS my hand and official seal.

Place Notary Seal Above

_____
Signature of Notary Public

OPTIONAL

Though the information below is not required by law, it may prove valuable to persons relying on the document and could prevent fraudulent removal and reattachment of this form to another document.

CAPACITY CLAIMED BY SIGNER

☐ Individual
☐ Corporate Officer

_____
Title(s)

☐ Partner(s) ☐ Limited ☐ General
☐ Attorney-In-Fact
☐ Trustee(s)
☐ Guardian/Conservator
☐ Other:
Signer is representing:
Name Of Person(s) Or Entity(ies)

_____
_____

DESCRIPTION OF ATTACHED DOCUMENT

_____
Title or Type of Document

_____
Number of Pages

_____
Date of Document

_____
Signer(s) Other Than Named Above

END OF CONTRACT AGREEMENT

PERFORMANCE BOND

FOR

CITY HALL TRASH ENCLOSURE MODIFICATIONS
CIP 2018-52

KNOW ALL PERSONS BY THESE PRESENTS

THAT WHEREAS the City of Santee (hereinafter referred to as "City") has awarded to _____, (hereinafter referred to as "Contractor") an agreement for _____ (hereinafter referred to as the "Project");

WHEREAS, the work to be performed by the Contractor is more particularly set forth in the Contract Documents for the Project dated _____, (hereinafter referred to as "Contract Documents"), the terms and conditions of which are expressly incorporated herein by reference; and

WHEREAS, the Contractor is required by the Contract Documents to perform the terms thereof and to furnish a bond for the faithful performance of the Contract Documents.

NOW THEREFORE, we, the undersigned Contractor and, _____ _____, as Surety, a corporation organized and duly authorized to transact business under the laws of the State of California, are held and firmly bound unto the City in the penal sum of _____ _____($_____), the sum being not less than one hundred percent (100%) of the total amount of the Contract, for which amount well and truly to be made, we bind ourselves, our heirs, executors and administrators, successors and assigns, jointly and severally, firmly by these presents.

THE CONDITIONS OF THIS OBLIGATION ARE SUCH that, that, if the Contractor, his or its heirs, executors, administrators, successors or assigns, shall in all things stand to and abide by, and well and truly keep and perform the covenants, conditions and agreements in the Contract Documents and any alteration thereof made as therein provided, on its part, to be kept and performed at the time and in the manner therein specified, and in all respects according to their intent and meaning; and shall faithfully fulfill all obligations including the one-year guarantee of all materials and workmanship; and shall indemnify and save harmless the City, its officers and agents, as stipulated in the Contract Documents, then this obligation shall become null and void; otherwise it shall be and remain in full force and effect.

As a condition precedent to the satisfactory completion of the Contract Documents, unless otherwise provided for in the Contract Documents, the guarantee obligation shall hold good for a period of one (1) year after the acceptance of the work by City, during which time if Contractor shall fail to make full, complete, and satisfactory repair and replacements and totally protect the City from loss or damage resulting from or caused by defective materials or faulty workmanship. The obligations of Surety hereunder shall continue so long as any obligation of Contractor remains. Nothing herein shall limit the City's rights or the Contractor or Surety's obligations under the Contract, law or equity, including, but not limited to, California Code of Civil Procedure section 337.15.

As a part of the obligation secured hereby and in addition to the face amount specified therefor, there shall be included costs and reasonable expenses and fees including reasonable attorney's fees, incurred by City in enforcing such obligation.

Whenever Contractor shall be, and is declared by the City to be, in default under the Contract Documents, the Surety shall remedy the default pursuant to the Contract Documents, or shall promptly, at the City's option:

(1) Take over and complete the Project in accordance with all terms and conditions in the Contract Documents; or

(2) Obtain a bid or bids for completing the Project in accordance with all terms and conditions in the Contract Documents and upon determination by Surety of the lowest responsive and responsible bidder, arrange for a Contract between such bidder, the Surety and the City, and make available as work progresses sufficient funds to pay the cost of completion of the Project, less the balance of the contract price, including other costs and damages for which Surety may be liable. The term "balance of the contract price" as used in this paragraph shall mean the total amount payable to Contractor by the City under the Contract and any modification thereto, less any amount previously paid by the City to the Contractor and any other set offs pursuant to the Contract Documents.

(3) Permit the City to complete the Project in any manner consistent with California law and make available as work progresses sufficient funds to pay the cost of completion of the Project, less the balance of the contract price, including other costs and damages for which Surety may be liable. The term "balance of the contract price" as used in this paragraph shall mean the total amount payable to Contractor by the City under the Contract and any modification thereto, less any amount previously paid by the City to the Contractor and any other set offs pursuant to the Contract Documents.

Surety expressly agrees that the City may reject any contractor or subcontractor which may be proposed by Surety in fulfillment of its obligations in the event of default by the Contractor.

Surety shall not utilize Contractor in completing the Project nor shall Surety accept a bid from Contractor for completion of the Project if the City, when declaring the Contractor in default, notifies Surety of the City's objection to Contractor's further participation in the completion of the Project.

The Surety, for value received, hereby stipulates and agrees that no change, extension of time, alteration or addition to the terms of the Contract Documents or to the Project to be performed thereunder shall in any way affect its obligations on this bond, and it does hereby waive notice of any such change, extension of time, alteration or addition to the terms of the Contract Documents or to the Project, including but not limited to the provisions of sections 2819 and 2845 of the California Civil Code.

IN WITNESS WHEREOF the parties hereto have set their names, titles, hands, and seals this _____day of _____, 2020.

(Corporate Seal of Principal,
if corporation)

_____
CONTRACTOR/PRINCIPAL

_____
Name

By_____

(Seal of Surety)

SURETY:

By:

_____
Attorney-In-Fact

Signatures of those signing for the Contractor and Surety must be notarized and evidence of corporate authority attached.

The rate of premium on this bond is _____ per thousand. The total amount of premium charges, $_____.

(The above must be filled in by corporate attorney.)

THE FOLLOWING INFORMATION IS MANDATORY
Any claims under this bond may be addressed to:

(Name and Address of Surety)

_____

_____

_____

(Name and Address of Agent or
Representative for service of process
in California, if different from above)

_____

_____

_____

(Telephone number of Surety and
Agent or Representative for service of
process in California)

_____

_____

_____

Notary Acknowledgment

A notary public or other officer completing this certificate verifies only the identity of the individual who signed the document to which this certificate is attached, and not the truthfulness, accuracy, or validity of that document.

STATE OF CALIFORNIA
COUNTY OF _____

On _____, 20___, before me, _____, Notary Public, personally
Date — Name And Title Of Officer (e.g. "Jane Doe, Notary Public")
appeared _____, who proved to me on the basis of satisfactory
Name(s) of Signer(s)
evidence to be the person(s) whose name(s) is/are subscribed to the within instrument and acknowledged to me that he/she/they executed the same in his/her/their authorized capacity(ies), and that by his/her/their signature(s) on the instrument the person(s), or the entity upon behalf of which the person(s) acted, executed the instrument.

I certify under PENALTY OF PERJURY under the laws of the State of California that the foregoing paragraph is true and correct.

WITNESS my hand and official seal.

Place Notary Seal Above

_____
Signature of Notary Public

OPTIONAL

Though the information below is not required by law, it may prove valuable to persons relying on the document and could prevent fraudulent removal and reattachment of this form to another document.

CAPACITY CLAIMED BY SIGNER

☐ Individual
☐ Corporate Officer

_____
Title(s)

☐ Partner(s) ☐ Limited ☐ General
☐ Attorney-In-Fact
☐ Trustee(s)
☐ Guardian/Conservator
☐ Other:
Signer is representing:
Name Of Person(s) Or Entity(ies)

_____
_____

DESCRIPTION OF ATTACHED DOCUMENT

_____
Title or Type of Document

_____
Number of Pages

_____
Date of Document

_____
Signer(s) Other Than Named Above

Note: Signatures of those signing for the Contractor and Surety must be notarized (duplicate as needed) and evidence of corporate authority attached.

END OF PERFORMANCE BOND

PAYMENT BOND (LABOR AND MATERIALS)

FOR

CITY HALL TRASH ENCLOSURE MODIFICATIONS
CIP 2018-52

KNOW ALL MEN BY THESE PRESENTS

THAT WHEREAS the City of Santee (hereinafter designated as the "City"), has awarded to _____,as Principal, a contract for the work described as follows: _____ _____ (the "Work"); and

WHEREAS, the work to be performed by the Contractor is more particularly set forth in the Contract Documents for the Project dated _____, (hereinafter referred to as "Contract Documents"), the terms and conditions of which are expressly incorporated herein by reference; and

WHEREAS, Principal is required to furnish a bond in connection with the contract described above; providing that if Principal or any of its Subcontractors shall fail to pay for any materials, provisions, provender, equipment, or other supplies used in, upon, for or about the performance of the work contracted to be done, or for any work or labor done thereon of any kind, or for amounts due under the Unemployment Insurance Code or for any amounts required to be deducted, withheld, and paid over to the Employment Development Department from the wages of employees of Principal and its Subcontractors with respect to such work or labor the Surety on this bond will pay for the same to the extent hereinafter set forth.

NOW THEREFORE, we, the Principal and _____ _____ as Surety, are held and firmly bound unto the City in the penal sum of _____ Dollars ($_____) lawful money of the United States of America, for the payment of which sum well and truly to be made, we bind ourselves, our heirs, executors, administrators, successors and assigns, jointly and severally, firmly by these presents.

THE CONDITION OF THIS OBLIGATION IS SUCH that if Principal, his or its subcontractors, heirs, executors, administrators, successors or assigns, shall fail to pay any of the persons named in section 9100 of the Civil Code, fail to pay for any materials, provisions or other supplies, used in, upon, for or about the performance of the work contracted to be done, or for any work or labor thereon of any kind, or amounts due under the Unemployment Insurance Code with respect to work or labor performed under the contract, or for any amounts required to be deducted, withheld, and paid over to the Employment Development Department or Franchise Tax Board from the wages of employees of the contractor and his subcontractors pursuant to section 18663 of the Revenue and Taxation Code, with respect to such work and labor the Surety or Sureties will pay for the same, in an amount not exceeding the sum herein above specified, and also, in case suit is brought upon this bond, all litigation expenses incurred by the City in such suit, including reasonable attorneys' fees, court costs, expert witness fees and investigation expenses.

This bond shall inure to the benefit of any of the persons named in section 9100 of the Civil Code so as to give a right of action to such persons or their assigns in any suit brought upon this bond.

It is further stipulated and agreed that the Surety on this bond shall not be exonerated or released from the obligation of this bond by any change, extension of time for performance, addition, alteration or modification in, to, or of any contract, plans, specifications, or agreement pertaining or relating to any scheme or work of improvement herein above described, or pertaining or relating to the furnishing of labor, materials, or equipment therefore, nor by any change or modification of any terms of payment or extension of the time for any payment pertaining or relating to any scheme or work of improvement herein above described, nor by any rescission or attempted rescission or attempted rescission of the contract, agreement or bond, nor by any conditions precedent or subsequent in the bond attempting to limit the right of recovery of claimants otherwise entitled to recover under any such contract or agreement or under the bond, nor by any fraud practiced by any person other than the claimant seeking to recover on the bond and that this bond be construed most strongly against the Surety and in favor of all persons for whose benefit such bond is given, and under no circumstances shall Surety be released from liability to those for whose benefit such bond has been given, by reason of any breach of contract between the City and the Principal or on the part of any oblige named in such bond, but the sole conditions of recovery shall be that the claimant is a person described in Section 9100 of the Civil Code and has not been paid the full amount of his or its claim and that Surety does hereby waive notice of any such change, extension of time, addition, alteration or modification herein mentioned and the provisions of sections 2819 and 2845 of the California Civil Code.

IN WITNESS WHEREOF, the above-bounded parties have executed this instrument under their seals this _____ day of _____, 20__, the name and corporate seal of each corporate party being hereto affixed and these presents duly signed by its undersigned representative pursuant to the authority of its governing body.

(Corporate Seal of Principal,
if corporation)

_____
CONTRACTOR/PRINCIPAL

_____
Name

By:_____

(Seal of Surety)

SURETY:

By: _____
Attorney-In-Fact

Signatures of those signing for the Contractor and Surety must be notarized and evidence of corporate authority attached.

Notary Acknowledgment

A notary public or other officer completing this certificate verifies only the identity of the individual who signed the document to which this certificate is attached, and not the truthfulness, accuracy, or validity of that document.

STATE OF CALIFORNIA
COUNTY OF _____

On _____, 20___, before me, _____, Notary Public, personally
Date — Name And Title Of Officer (e.g. "Jane Doe, Notary Public")
appeared _____, who proved to me on the basis of satisfactory
Name(s) of Signer(s)
evidence to be the person(s) whose name(s) is/are subscribed to the within instrument and acknowledged to me that he/she/they executed the same in his/her/their authorized capacity(ies), and that by his/her/their signature(s) on the instrument the person(s), or the entity upon behalf of which the person(s) acted, executed the instrument.

I certify under PENALTY OF PERJURY under the laws of the State of California that the foregoing paragraph is true and correct.

WITNESS my hand and official seal.

Place Notary Seal Above

_____
Signature of Notary Public

OPTIONAL

Though the information below is not required by law, it may prove valuable to persons relying on the document and could prevent fraudulent removal and reattachment of this form to another document.

CAPACITY CLAIMED BY SIGNER

☐ Individual
☐ Corporate Officer

_____
Title(s)

☐ Partner(s) ☐ Limited ☐ General
☐ Attorney-In-Fact
☐ Trustee(s)
☐ Guardian/Conservator
☐ Other:
Signer is representing:
Name Of Person(s) Or Entity(ies)

_____
_____

DESCRIPTION OF ATTACHED DOCUMENT

_____
Title or Type of Document

_____
Number of Pages

_____
Date of Document

_____
Signer(s) Other Than Named Above

Note: Signatures of those signing for the Contractor and Surety must be notarized (duplicate as needed) and evidence of corporate authority attached.

END OF PAYMENT BOND

WORKERS' COMPENSATION INSURANCE DECLARATION

CITY HALL TRASH ENCLOSURE MODIFICATIONS
CIP 2018-52

FOR THE CITY OF SANTEE

Section 3700 of the Labor Code provides in part as follows:

"Every employer except the state shall secure the payment of compensation in one or more of the following ways;

(a) By being insured against liability to pay compensation in one or more insurers duly authorized to write compensation insurance in this state.
(b) By securing from the Director of Industrial Relations a certificate of consent to self-insure, which may be given upon furnishing proof satisfactory to the Director of Industrial Relations of ability to self-insure and to pay any compensation that may become due to his/her employees..."

I am aware of the provisions of Section 3700 of the Labor Code which require every employer to be insured against liability for worker's compensation or to undertake self-insurance in accordance with the provisions of that code, and I will comply with such provisions before commencing the performance of the Work of this Contract.

Company Name:_____

Signatory Name: _____ *(Print)*

Title: _____

Signature: _____

Date: _____

(In accordance with Article 5, commencing at Section 1860, Chapter 1, Part 7, Division 2 of the Labor Code, the above certificate must be signed and filed with the awarding body prior to performing any work under this Contract.)

***NOTE: APPROPRIATE NOTARIAL ACKNOWLEDGEMENTS OF EXECUTION BY CONTRACTOR MUST BE ATTACHED.**

WORKERS' COMPENSATION INSURANCE CERTIFICATE
(Continued)

Notary Acknowledgment

A notary public or other officer completing this certificate verifies only the identity of the individual who signed the document to which this certificate is attached, and not the truthfulness, accuracy, or validity of that document.

STATE OF CALIFORNIA
COUNTY OF _____

On _____, 20___, before me, _____, Notary Public, personally
Date — Name And Title Of Officer (e.g. "Jane Doe, Notary Public")
appeared _____, who proved to me on the basis of satisfactory
Name(s) of Signer(s)
evidence to be the person(s) whose name(s) is/are subscribed to the within instrument and acknowledged to me that he/she/they executed the same in his/her/their authorized capacity(ies), and that by his/her/their signature(s) on the instrument the person(s), or the entity upon behalf of which the person(s) acted, executed the instrument.

I certify under PENALTY OF PERJURY under the laws of the State of California that the foregoing paragraph is true and correct.

WITNESS my hand and official seal.

Place Notary Seal Above

_____
Signature of Notary Public

OPTIONAL

Though the information below is not required by law, it may prove valuable to persons relying on the document and could prevent fraudulent removal and reattachment of this form to another document.

CAPACITY CLAIMED BY SIGNER

☐ Individual
☐ Corporate Officer

_____
Title(s)

☐ Partner(s) ☐ Limited ☐ General
☐ Attorney-In-Fact
☐ Trustee(s)
☐ Guardian/Conservator
☐ Other:
Signer is representing:
Name Of Person(s) Or Entity(ies)

_____
_____

DESCRIPTION OF ATTACHED DOCUMENT

_____
Title or Type of Document

_____
Number of Pages

_____
Date of Document

_____
Signer(s) Other Than Named Above