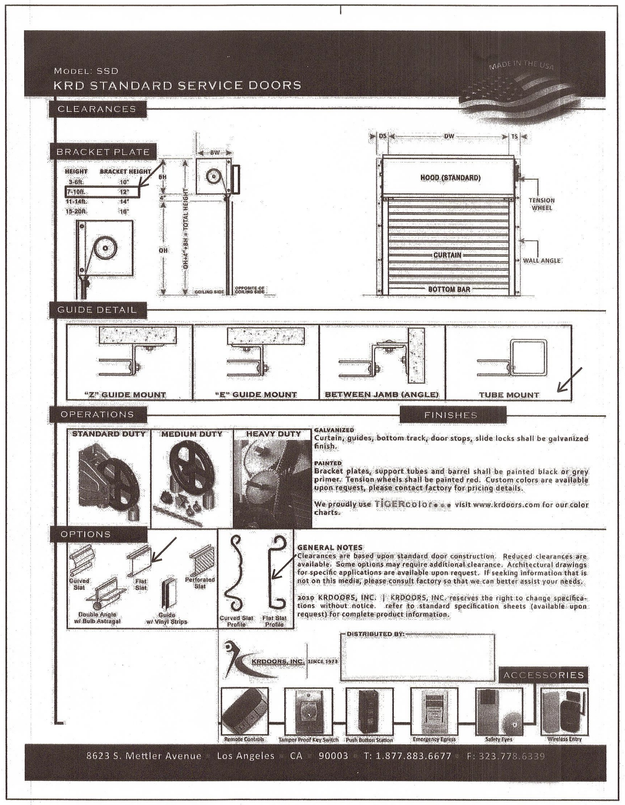


Please be advised that all notes on sheet 4 of this detail apply to trash enclosure installations

FLOOR PLAN

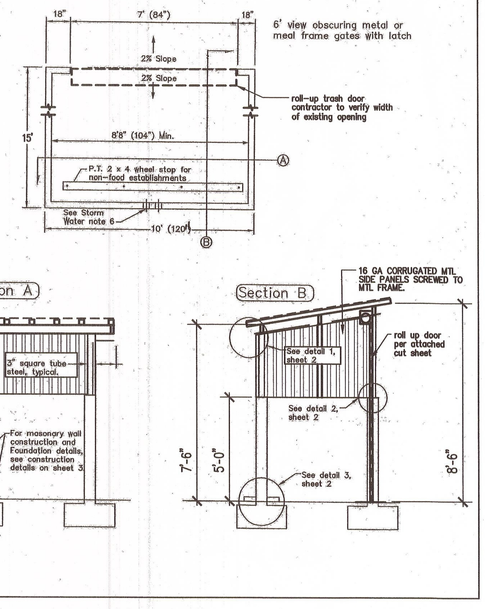


## Trash Enclosure Detail - 6'

ROOF PLAN

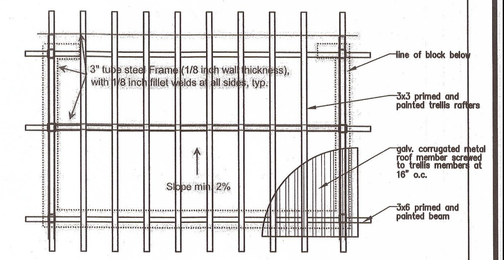


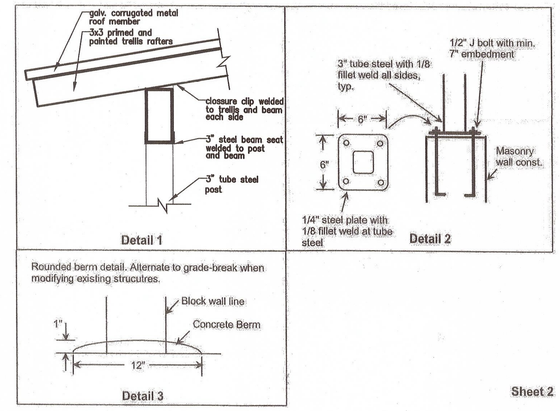


Sheet 2

## Trash Enclosure Detail - 6'

(Based on City of San Diego Master Plan 47A)

Wall and footing construction details for trash enclosure see notes on sheet 4

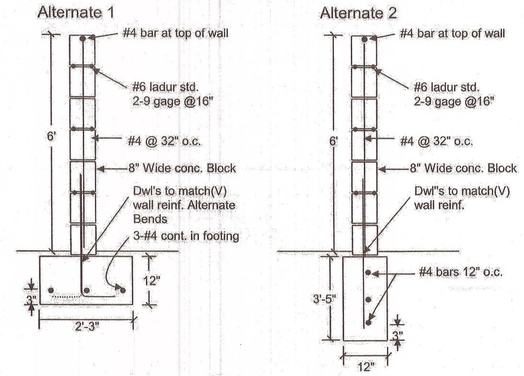


1. All material and workmanship shall conform to the requirements of the Building Code as currently adopted.
2. Concrete shall attain a compressive strength of 2,500 PSI min. at 28 days.
3. Block units shall be medium weight conforming to ASTM C90, Type 1 (latest revision), F'm = 1500 PSI.
4. Mortar shall be type S conforming to ASTM C270 or C1142 with compressive strength of 1,800 PSI min. at 28 days.
5. Grout shall be composed of the following ratio by volume: 1 part portland cement, 3 parts sand, 2 parts pea gravel, and sufficient water for pouring without segregation of grout constituents (min. comp. strength 2000 PSI at 28 days).
6. All reinforcing steel shall comply with ASTM A615, grade 60 for #4 bars. Center vertical steel in block cell.
7. Wall joint reinforcing steel shall be dur-o-wall wire conforming to ASTM A82 and ASTM A641 - class 3 finish. Min. lap splice of joint reinforcement shall be 12 inches.
8. All cells containing reinforcement shall be solid grouted.
9. All horizontal reinforcing bars shall be placed in bond beam units. All joint reinforcing shall be placed in mortared bed joint.
10. All grout shall be consolidated by vibrating immediately. Reconsolidate grout after initial water loss but before plasticity is lost to insure adequate consolidation.
11. Min. lap splice of reinforcing bars shall be 48 bar diameters.
12. Concrete block units are to be staggered (common bond) and are to have vertical continuity of cells unobstructed.
13. All footings must extend into firm undisturbed natural soil or soil which has been compacted to at least 90% max. density. Compaction reports for fill areas must be presented to building inspector at time of foundation inspection.
14. These walls shall not be constructed on expansive soil (index greater than 20) unless soil has been specifically prepared in accordance with recommendations of a civil or geotechnical engineer. There walls shall not be constructed in liquifiable soils or other soils of profile type Se or Sf.
15. Design assumes 1/2 inch plaster on both sides of wall.

Sheet 3

## Explanatory Notes for Trash Enclosure Standard

**Planning Division**

1. Enclosures shall not be located within exterior yard setback areas or within 5 feet of any alley.
2. New enclosures shall be constructed to match and/or complement the development it supports by color and material.

**Storm Water**

1. Dumpster lid(s) must be kept closed at all times.
2. Dumpster enclosure must be lockable and locked when not in use.
3. All existing and proposed trash enclosures shall have an impermeable roof that prevents rainwater from entering the trash enclosure. An alternative to the impermeable roof can be submitted for approval if it can be proven to the Storm Water Division that the project meets any of the following exceptions:
   A. An existing trash enclosure that is within an area subject to Planning Department setback restrictions for structures.
   B. No location exists where a proposed roofed trash enclosure can be constructed without violating Planning and Building and Fire Safety Department (Building) restrictions.
   C. It can be demonstrated that the cost for constructing a roofed trash enclosure in any location and implementing any required fire suppression system (notwithstanding a fire suppression system otherwise required by Building) would be an excessive financial burden.
4. The sides of the roof shall extend no less than 6 inches further than the walls of the trash enclosure.
5. The height of the trash enclosure roof must account for rolling a dumpster in and out easily for disposal purposes and for closing of the lid.
6. Drainage:
   A. Any trash enclosure that has been determined by the Storm Water Division as meeting the trash enclosure roof exception(s) listed above must drain any rainwater and garbage leachate collected in the dumpster area to an adjacent landscaped area or sufficient sized treatment. Best Management Practice (BMP), such as an infiltration trench. Weep-holes or small diameter pipes may be utilized to drain the trash enclosure.
   B. A drain that discharges to the sanitary sewer through the existing sewer lateral can also be constructed provided the trash enclosure has an impermeable roof and does not accept run-on rainwater.
7. Maintenance:
   A. The trash enclosure shall be inspected at least daily for leaks from dumpster (if noted, dumpster shall be replaced).
   B. Any standing liquids must be cleaned up and disposed of properly using a mop and bucket or with a wet-dry vacuum. Mopping/vacuuming must be done before and after a rain event if the trash enclosure cannot be roofed. All liquids shall be void of trash and put into the sanitary sewer. Trash enclosures shall never be cleaned using a hose or power-wash equipment.

**Fire**

1. If trash enclosure is located closer than 10 feet to a building or property line a fire sprinkler system must be installed to comply with CFC 304.3.3. The wall on the property line side shall be solid to the roof sheathing if trash enclosure is located closer than 3 feet from the property line. If trash enclosure is located between 3 feet and 10 feet from the property line, the open area of the wall on the property line side shall not exceed the maximum per table 705.8 of the California Building Code.

**MAINTENANCE TIPS**

- Double bag trash containing liquids or food before placing into dumpster OR dump liquids into the sanitary sewer, leaving the solids behind to be bagged and placed in the dumpster.
- Schedule a daily mopping of the TE at the end of the day shift.

Sheet 4

SHEET TITLE

TRASH ENCLOSU PLAN AND DETAILS

SHEET NO:

A0.3